BOONSUNGNOEN PUMP&VALVE (THAILAND) CO.,LTD.
55/52 Moo.2, Ban Chang, Muang Pathumthani, Pathum Thani 12000
Tel.02-581-1280(Auto.5Line.) Email : bsn.chemtai@gmail.com

EBARA

CONTENTS

50Hz

Rev. V

	Page
- SPECIFICATION	
SPECIFICATION	200
SPECIFICATION	201
SPECIFICATION	202
PERFORMANCE RANGE	203
SELECTION CHART	204
TYPE KEY	205
PERFORMANCE CURVE SPECIFICATIONS	206
MEI INDEX SPECIFICATIONS	207
PERFORMANCE CURVE 32-125	208
PERFORMANCE CURVE 32-160	209
PERFORMANCE CURVE 32-200	210
PERFORMANCE CURVE 40-125	211
PERFORMANCE CURVE 40-160	212
PERFORMANCE CURVE 40-200	213
PERFORMANCE CURVE 50-125	214
PERFORMANCE CURVE 50-160	215
PERFORMANCE CURVE 50-200	216
PERFORMANCE CURVE 65-125	217
PERFORMANCE CURVE 65-160	218
PERFORMANCE CURVE 65-200	219
PERFORMANCE CURVE 65-250	220
PERFORMANCE CURVE 80-160	221
PERFORMANCE CURVE 80-200	222
PERFORMANCE CURVE 80-250	223
- CONSTRUCTION	
SECTIONAL VIEW DRAWING 3(.)M 32, 40, 50, 65-125/160/200	300
SECTIONAL VIEW TABLE 3(.)M 32, 40, 50, 65-125/160/200	301
SECTIONAL VIEW DRAWING 3LMZ 32, 40, 50, 65-125/160/200	302
SECTIONAL VIEW TABLE 3LMZ 32, 40, 50, 65-125/160/200	303
SECTIONAL VIEW DRAWING 3LM 80-160/11	304
SECTIONAL VIEW DRAWING 3LM 80-160/15R/15/18.5	305
SECTIONAL VIEW TABLE 3LM 80-160	306
SECTIONAL VIEW DRAWING 3(.)S 32, 40, 50	307
SECTIONAL VIEW DRAWING 3(.)S 65-125/160/200	308
SECTIONAL VIEW TABLE 3(.)S 32, 40, 50, 65-125/160/200	309
SECTIONAL VIEW DRAWING 3LSZ 32, 40-125/160, 40-200/5.5/7.5 50-125/160, 50-200/9.2, 65-125, 65-160/7.5/9.2	310
SECTIONAL VIEW DRAWING 3LSZ 40-200/11, 50-200/11/15, 65-160/11/15, 62-200	311
SECTIONAL VIEW TABLE 3LSZ 32, 40, 50, 65-125/160/200	312
SECTIONAL VIEW DRAWING 3LS 80-160	313
SECTIONAL VIEW TABLE 3LS 80-160	314
SECTIONAL VIEW DRAWING 3LS 65-250, 80-200/250	315

BOONSUNGNOEN PUMP&VALVE (THAILAND) CO.,LTD.
55/52 Moo.2, Ban Chang, Muang Pathumthani, Pathum Thani 12000
Tel.02-581-1280(Auto.5Line.) Email : bsn.chemtai@gmail.com

CONTENTS

50Hz

Rev. V

SECTIONAL VIEW TABLE 3LS 65-250, 80-200/250 316
SECTIONAL VIEW DRAWING 3(.)P 32, 40, 50, 65-125/160/200 317
SECTIONAL VIEW TABLE 3(.)P 32, 40, 50, 65-125/160/200 318
SECTIONAL VIEW DRAWING 3LP 80-160 319
SECTIONAL VIEW DRAWING 3LP 65-250, 80-200/250 320
SECTIONAL VIEW DRAWING 3LP 65-250, 80-160/200/250 321
SECTIONAL VIEW TABLE 3LP 80-160 322
SECTIONAL VIEW TABLE 3LP 65-250, 80-200/250 323
BEARINGS 3(.)M 324
BEARINGS 3(.)S-3(.)P 325
MECHANICAL SEAL (standard, H and special version) 326
MECHANICAL SEAL (L version ø 22) 327
MECHANICAL SEAL (L version ø 30-35) 328
MECHANICAL SEAL (HS version and special version ø 22) 329
MECHANICAL SEAL (HS version ø 30) 330
MECHANICAL SEAL (HW, HSW, E and special version) 331
MECHANICAL SEAL (ES version) 332
COUPLING 333
FLEXIBLE COUPLING 334
FITTINGS 335
FITTINGS 336

- DIMENSIONS

DIMENSIONS 3(.)M 32, 40, 50, 65-125/160 400
DIMENSIONS 3(.)M 50-200, 65-160/15, 65-200 401
DIMENSIONS 3LMZ 32, 40, 50-125/160/200/9.2/11, 65-125/160/7.5/9.2/11 402
DIMENSIONS 3LMZ 50-200/15, 65-160/15, 65-200 403
DIMENSIONS 3LM 80-160/11 404
DIMENSIONS 3LM 80-160/15R/15/18.5 405
DIMENSIONS 3(.)S 32, 40, 50 406
DIMENSIONS 3(.)S 32, 65 407
DIMENSIONS 3(.)S 40, 50, 65 408
DIMENSIONS 3(.)S 32, 40, 50, 65 409
DIMENSIONS 3LSZ 32-125/160, 32-200/3/4, 50-125/2.2, 65-125/4 410
DIMENSIONS 3LSZ 32-200/5.5/7.5, 40-125/160, 40-200/5.5/7.5, 50-125/3/4, 50-160 50-200/9.2, 65-125/5.5/7.5, 65-160/7.5/9.2 411
DIMENSIONS 3LSZ 40-200/11, 50-20011/15, 65-160/11/15, 65-200 412
DIMENSIONS 3LS 80-160 413
DIMENSIONS 3LS 65-250, 80-200/250 414
DIMENSIONS 3LS 80-200/30/37, 80-250/45 415
DIMENSIONS 3LS 80-250/55 416
DIMENSIONS 3(.)P 32, 40, 50, 65 417
DIMENSIONS TABLE 3(.)P 32, 40, 50, 65 418
DIMENSIONS 3LP 65-250,80 419

BOONSUNGNOEN PUMP&VALVE (THAILAND) CO.,LTD.
55/52 Moo.2, Ban Chang, Muang Pathumthani, Pathum Thani 12000
Tel.02-581-1280(Auto.5Line.) Email : bsn.chemtai@gmail.com

CONTENTS

50Hz

Rev. V

DIMENSIONS 3LP 80-200/30/37, 80-250/45 420
DIMENSIONS 3LP 80-250/55 421
PACKING 3(.)M 422
PACKING 3(.)S 423
PACKING 3(.)P 424

- TECHNICAL DATA
MOTOR DATA 3(.)M 500
MOTOR DATA 3(.)S-3(.)P 501
NOISE DATA 3(.)M 502
NOISE DATA 3(.)S-3(.)P 503

BOONSUNGNOEN PUMP&VALVE (THAILAND) CO.,LTD.
55/52 Moo.2, Ban Chang, Muang Pathumthani, Pathum Thani 12000
Tel.02-581-1280(Auto.5Line.) Email : bsn.chemtai@gmail.com

SPECIFICATION

50Hz

Rev. V

Version		3M	3S	3P	3LM	3LMZ	3LS	3LSZ	3LP
Pump sizes	32-125	■	■	■	●	◊	●	◊	●
	32-160	■	■	■	●	◊	●	◊	●
	32-200	■	■	■	●	◊	●	◊	●
	40-125	■	■	■	●	◊	●	◊	●
	40-160	■	■	■	●	◊	●	◊	●
	40-200	■	■	■	●	◊	●	◊	●
	50-125	■	■	■	●	◊	●	◊	●
	50-160	■	■	■	●	◊	●	◊	●
	50-200	■	■	■	●	◊	●	◊	●
	65-125	■	■	■	●	◊	●	◊	●
	65-160	■	■	■	●	◊	●	◊	●
	65-200	■	■	■	●	◊	●	◊	●
	65-250	-	-	-	-	-	●	-	●
	80-160	-	-	-	●	-	●	-	●
	80-200	-	-	-	-	-	●	-	●
	80-250	-	-	-	-	-	▲	-	▲

■ Available also with H, HS, HW, HSW, E, Q1Q1EGG, Q1U3EGG, Q1AEGG, U3CEGG, U3U3CEGG version.
U3U3EGG not available for model 65-160/15 and 65-200

● Available also with H, HW, HSW, E, Q1Q1EGG, Q1U3EGG, Q1AEGG, U3CEGG, U3U3EGG version.
U3U3EGG available for model 32, 40, 50, 65-125 and 65-160/7.5/9.2/11

▲ Available also with H, HW, HSW, ES, Q1Q1EGG, Q1U3EGG, Q1AEGG, U3CEGG version.

– Not available.

◊ Available only standard version.

BOONSUNGNOEN PUMP&VALVE (THAILAND) CO.,LTD.
55/52 Moo.2, Ban Chang, Muang Pathumthani, Pathum Thani 12000
Tel.02-581-1280(Auto.5Line.) Email : bsn.chemtai@gmail.com

SPECIFICATION 50Hz

Rev. V

PUMP								
Version				3M	3S	3P	3LM(Z)	3LS(Z)	3LP
Liquid Handled	Type of liquid			Clean water and moderately aggressive fluids					
				/			Drinking water and water contains glycol for E and ES version		
	Temperature [℃]			min. -10 min. -20 (E version) max. +90 (Standard-Q1AEGG-U3U3EGG-Q1Q1EGG-Q1U3EGG,U3CEGG) max. +110 (H-HS-HW-HSW version) max. +120 (E version)			min. -10 min. -20 (E and ES version) max. +110 (Standard-Q1AEGG-U3U3EGG-Q1Q1EGG-Q1U3EGG,U3CEGG) max. +110 (H-HW-HSW version) max. +120 (E and ES version)		
Maximum working pressure [MPa]				1					
Construction	Impeller			Closed centrifugal type for 32, 40, 50 version Reinforced laser welding for 40-200/11, 50-200/15 Closed centrifugal three dimensional blades for 65 and 80 version					
	Shaft seal type			Mechanical seal			Mechanical seal with stationary ring secured against rotation		
	Bearing			Sealed ball bearing					
Pipe Connection	Suction	32-125/160/200		Flange DN50 according DIN 2532 Standard					
		40-125/160/200 50-125/160/200		Flange DN65 according DIN 2532 Standard					
		65-125/160/200/250		Flange DN80 according DIN 2532 Standard					
		80-160/200/250		Flange DN100 according DIN 2532 Standard					
	Discharge	32-125/160/200		Flange DN32 according DIN 2532 Standard					
		40-125/160/200		Flange DN40 according DIN 2532 Standard					
		50-125/160/200		Flange DN50 according DIN 2532 Standard					
		65-125/160/200/250		Flange DN65 according DIN 2532 Standard					
		80-160/200/250		Flange DN80 according DIN 2532 Standard					
Material	Casing	32-125/160/200 40-125/160/200 50-125/160/200 65-125/160/200		EN 1.4301 (AISI 304)			EN 1.4404 (AISI 316L)		
		65-250 80-160/200/250		/			EN 1.4401 (AISI 316) made by precision casting		
	Impeller	32-125/160/200 40-125/160/200 50-125/160/200		EN 1.4301 (AISI 304)			EN 1.4404 (AISI 316L)		
		65-125/160/200		EN 1.4401 (AISI 316) made by precision casting					
		65-250 80-160/200/250		/			EN 1.4401 (AISI 316) made by precision casting		
	Casing cover	32-125/160/200 40-125/160/200 50-125/160/200 65-125/160/200		EN 1.4301 (AISI 304)			EN 1.4404 (AISI 316L)		
		65-250 80-160/200/250		/			EN 1.4401 (AISI 316) made by precision casting		
	Mechanical seal	32-125/160/200 40-125/160/200 50-125/160/200 65-125/160/200		Ceramic/Carbon/NBR (For version see page 327÷333)			SiC/SiC/FPM (L version) (For version see page 327÷333)		
		65-250 80-160/200		/					
		80-250					SiC/Carbon/EPDM (ES version) [2]		
	O-ring			NBR [1]			FPM [3]		
	Shaft	32, 40, 50, 65-125 65-160/11	d=19	EN 1.4301 (AISI 304)			EN 1.4404 (AISI 316L)		
		50-200/15	d=22						
		65-160/15 65-200	d=24						
		65-250	d=24	/			EN 1.4462 (Duplex stainless steel)		
		80-160	d=24				EN 1.4404 (AISI 316L)		
		80-200/22	d=24						
		80-200/30-37	d=24				EN 1.4462 (Duplex stainless steel)		
		80-250	d=29						
	Bracket			Cast iron - Aluminium					
Applicable standard of test				ISO 9906:2012 – Grade 3B					

[1] FPM for H-HS-HW-HSW version / EPDM for Q1AEGG, U3U3EGG, Q1Q1EGG, Q1U3EGG, U3EGG
[2] ES option only for 80-250 2 poles Ø35
[3] EPDM for E-ES version and for Q1AEGG, U3U3EGG, Q1Q1EGG, Q1U3EGG, U3CEGG

BOONSUNGNOEN PUMP&VALVE (THAILAND) CO.,LTD.
55/52 Moo.2, Ban Chang, Muang Pathumthani, Pathum Thani 12000
Tel.02-581-1280(Auto.5Line.) Email : bsn.chemtai@gmail.com

SPECIFICATION 50Hz

Rev. V

MOTOR					
Type		3(.)M(Z)		3(.)S(Z)	3(.)P
		Electric - TEFC			
		Single Phase	Three Phase		
Efficiency level (Reg. 640/2009)		/	IE2 from 1.1 kW up to 5.5 kW IE3 from 1.1 kW up to 55 kW		
No. of Poles		2			
Rotation speed	[min^{-1}]	≈ 2900			
Insulation Class		F		F (temperature rise class B)	
Protection degree (CEI EN 60034-5)		IP 55			
Power rating	[kW]	1.1 ÷ 2.2	1.1 ÷ 22	1.1 ÷ 55	
	[HP]	1.5 ÷ 3.0	1.5 ÷ 30	1.5 ÷ 7.5	
Frequency	[Hz]	50			
Voltage	[V]	230 ±10%	230/400 ±10% (up to 4.0 kW) 400/690 ±10% (5.5 kW and above)		
Over load protection		Provided by the user			
Casing material		Aluminium			
Motor support		Cast iron - Alluminium			
Dimensions of cable entry		M20x1.5	PG13.5 PG16 PG21	M32x1.5 M40x1.5 M50x1.5	
			M20x1.5, M25x1.5		
Flange mount (IEC motor)		/		3(.)S IMB5 (up to 2.2 kW) IMB35 (3 kW and above) 3LSZ IM B35	IM B3

BOONSUNGNOEN PUMP&VALVE (THAILAND) CO.,LTD.
55/52 Moo.2, Ban Chang, Muang Pathumthani, Pathum Thani 12000
Tel.02-581-1280(Auto.5Line.) Email : bsn.chemtai@gmail.com

SELECTION CHART

50Hz

Rev. V

PERFORMANCE RANGE

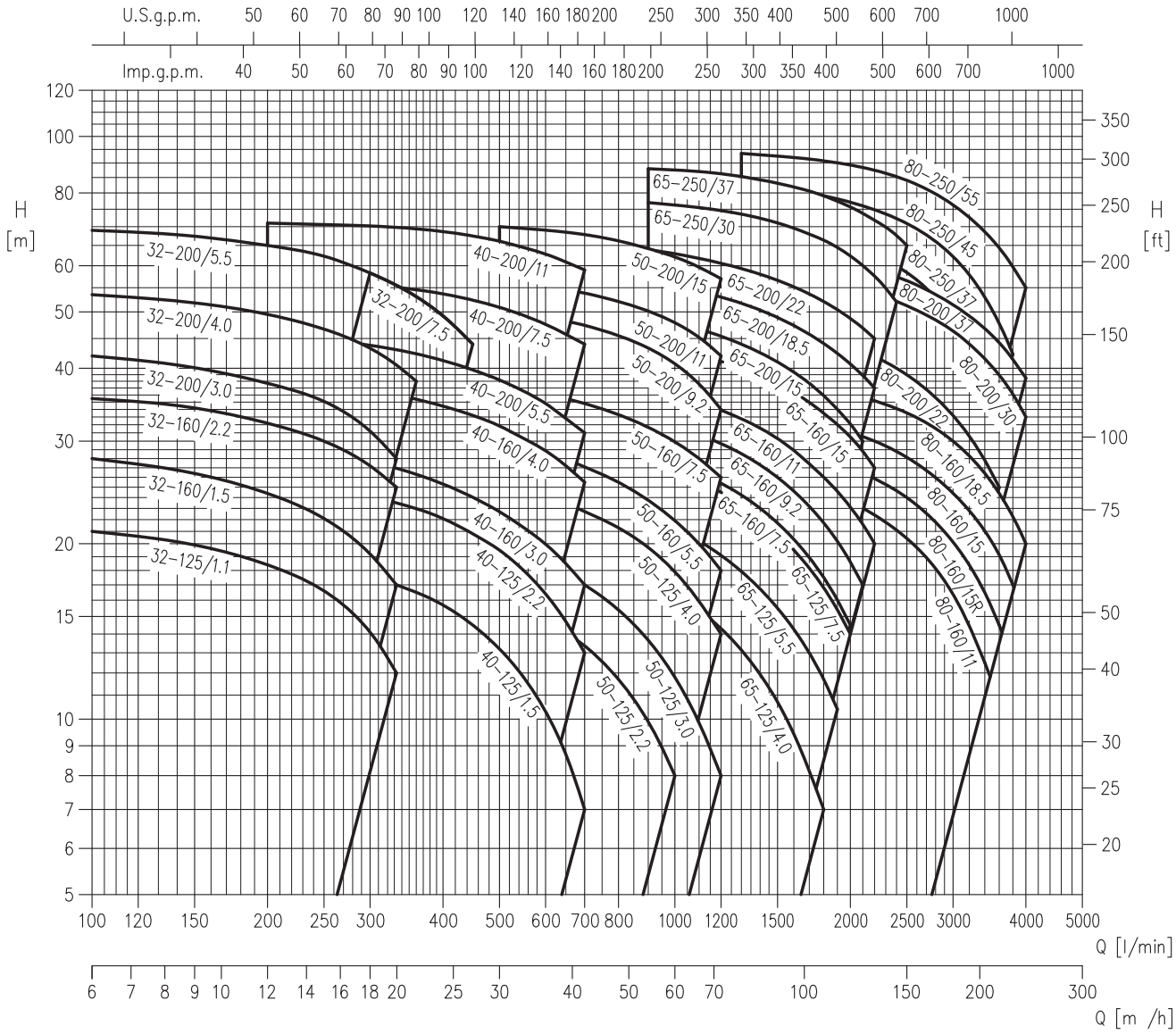

BOONSUNGNOEN PUMP&VALVE (THAILAND) CO.,LTD.
55/52 Moo.2, Ban Chang, Muang Pathumthani, Pathum Thani 12000
Tel.02-581-1280(Auto.5Line.) Email : bsn.chemtai@gmail.com

SELECTION CHART

50Hz

Rev. V

SELECTION CHART

3 SERIES: 32, 40, 50 Version

Pump type	Power		l/min	0	100	150	200	300	333	360	400	450	500	600	700	800	1000	1200
	[kW]	[HP]	m³/h	0	6	9	12	18	20	22	24	27	30	36	42	48	60	72
32-125/1.1(M) *	1.1	1.5		22.5	21	19.9	18.4	14.1	12	-	-	-	-	-	-	-	-	-
32-160/1.5(M) *	1.5	2		29.5	28	26.5	24.5	19.2	17	-	-	-	-	-	-	-	-	-
32-160/2.2(M) *	2.2	3		37	35.5	34	32	27	25	-	-	-	-	-	-	-	-	-
32-200/3.0	3	4		44	42	40	37.5	31	28	-	-	-	-	-	-	-	-	-
32-200/4.0	4	5.5		55	53.5	52	49.5	43.5	40.5	38	-	-	-	-	-	-	-	-
32-200/5.5	5.5	7.5		70.5	69	67.5	65	58.5	-	-	-	-	-	-	-	-	-	-
32-200/7.5	7.5	10		70.5	69	67.5	65	58.5	55.5	53	49	44	-	-	-	-	-	-
40-125/1.5(M) *	1.5	2		20	-	-	19	17.6	17	16.5	15.7	14.5	13.2	10.3	7	-	-	-
40-125/2.2(M) *	2.2	3		26.5	-	-	25.5	24	23.5	23	22	21	19.5	16.4	13	-	-	-
40-160/3.0	3	4		31	-	-	29.5	27.5	27	26.5	25.5	24	22.5	20	17	-	-	-
40-160/4.0	4	5.5		40	-	-	38.5	37	36	35.5	34.5	33	32	29	25.5	-	-	-
40-200/5.5	5.5	7.5		47	-	-	45.5	44	43	42.5	41	39.5	38	35	31	-	-	-
40-200/7.5	7.5	10		58	-	-	57	55.5	55	54.5	53.5	52.5	51	47.5	44	-	-	-
40-200/11	11	15		72	-	-	71	70	70	69.5	68.5	67.5	66	63	59	-	-	-
50-125/2.2(M) *	2.2	3		19	-	-	-	-	-	-	17.5	17	16.3	14.9	13.4	11.7	8	-
50-125/3.0	3	4		22	-	-	-	-	-	-	20.5	20	19.6	18.4	17	15.4	11.8	8
50-125/4.0	4	5.5		26.5	-	-	-	-	-	-	26	25.5	25	24	22.5	21.5	17.9	14
50-160/5.5	5.5	7.5		33	-	-	-	-	-	-	31	30.5	30	28.5	27	25.5	22	18
50-160/7.5	7.5	10		40	-	-	-	-	-	-	38.5	38	37.5	36	35	33.5	30	26
50-200/9.2	9.2	12.5		53	-	-	-	-	-	-	-	-	50	49	47.5	45.5	40.5	34
50-200/11	11	15		59	-	-	-	-	-	-	-	-	56	55	54	52	48	42
50-200/15	15	20		72	-	-	-	-	-	-	-	-	70	69	68	66	62	57

* Single phase version only for 3M type

3 SERIES: 65, 80 Version

Pump type	Power		l/min	0	600	700	900	1300	1500	1700	1900	2100	2200	2300	2400	2500	3000	3400	3600	3800	4000
	[kW]	[HP]	m³/h	0	36	42	54	78	90	102	114	126	132	138	144	150	180	204	216	228	240
65-125/4.0	4	5.5		22.2	19.8	19	17.3	13.3	11	8.6	6.3	-	-	-	-	-	-	-	-	-	-
65-125/5.5	5.5	7.5		27	-	24	22.2	18	15.7	13.3	10.8	8	-	-	-	-	-	-	-	-	-
65-125/7.5	7.5	10		32	-	29.5	27.8	23.5	21.1	18.7	16.1	13.4	12	-	-	-	-	-	-	-	-
65-160/7.5	7.5	10		32	-	30	28.6	24.8	22.5	19.9	17.1	14.2	-	-	-	-	-	-	-	-	-
65-160/9.2	9.2	12.5		36.5	-	34.5	32.8	28.8	26.5	23.9	21.1	18.3	16.8	-	-	-	-	-	-	-	-
65-160/11	11	15		40.5	-	38.5	37.1	33.1	30.9	28.4	25.8	23	21.5	20	-	-	-	-	-	-	-
65-160/15	15	20		48	-	45.5	44	40	37.8	35.3	32.6	29.6	28	26.5	-	-	-	-	-	-	-
65-200/15	15	20		53.5	-	51	49	44	41.5	38.4	35.3	31.8	30	-	-	-	-	-	-	-	-
65-200/18.5	18.5	25		60.5	-	58.5	56.5	51.5	49	46	43	39.7	38	36.3	-	-	-	-	-	-	-
65-200/22	22	30		67	-	65.5	64	59.5	57	54	51	48	46.5	45	-	-	-	-	-	-	-
65-250/30	30	40		78	-	-	77	73.5	71	68	64.5	60	57.5	55	52	-	-	-	-	-	-
65-250/37	37	50		89	-	-	88	85.5	83	80.5	77.5	74	72	70	67.5	65	-	-	-	-	-
80-160/11	11	15		29	-	-	-	27.3	26.4	25.4	24.2	23	22.4	21.8	21.1	20.4	16.4	12.5	-	-	-
80-160/15R	15	20		32	-	-	-	30.5	29.7	28.8	27.7	26.5	25.9	25.3	24.6	24	20.1	16.5	14.5	-	-
80-160/15				35	-	-	-	34	33.3	32.5	31.5	30.5	30	29.4	28.8	28.1	24.4	21	19.1	17	-
80-160/18.5	18.5	25		40	-	-	-	39	38.4	37.6	36.7	35.7	35.2	34.7	34.1	33.5	30	26.4	24.4	22.3	20
80-200/22	22	30		50	-	-	-	48	47	45.5	44.5	43	42	41	40	39	33.2	27.8	25	-	-
80-200/30	30	40		60	-	-	-	58.5	58	57	56	54.5	54	53	52	51	46.5	41.5	39	36.1	33
80-200/37	37	50		66	-	-	-	64	63	62	61	59.5	59	58	57.5	56.5	51.5	47	44.5	41.5	38.5
80-250/37	37	50		73	-	-	-	71.5	70.5	68.5	66.5	64	63	61.5	60	58.5	48.5	38	-	-	-
80-250/45	45	60		84	-	-	-	82.5	81.5	80	78	76	75	73.5	72.5	71	62	53	48	42.5	-
80-250/55	55	75		95	-	-	-	93.5	92.5	91.5	90	88.5	87.5	86.5	85.5	84	76.5	68.5	64.5	60	55

BOONSUNGNOEN PUMP&VALVE (THAILAND) CO.,LTD.
55/52 Moo.2, Ban Chang, Muang Pathumthani, Pathum Thani 12000
Tel.02-581-1280(Auto.5Line.) Email : bsn.chemtai@gmail.com

TYPE KEY AND CURVE SPECIFICATIONS

50Hz

Rev. V

TYPE KEY

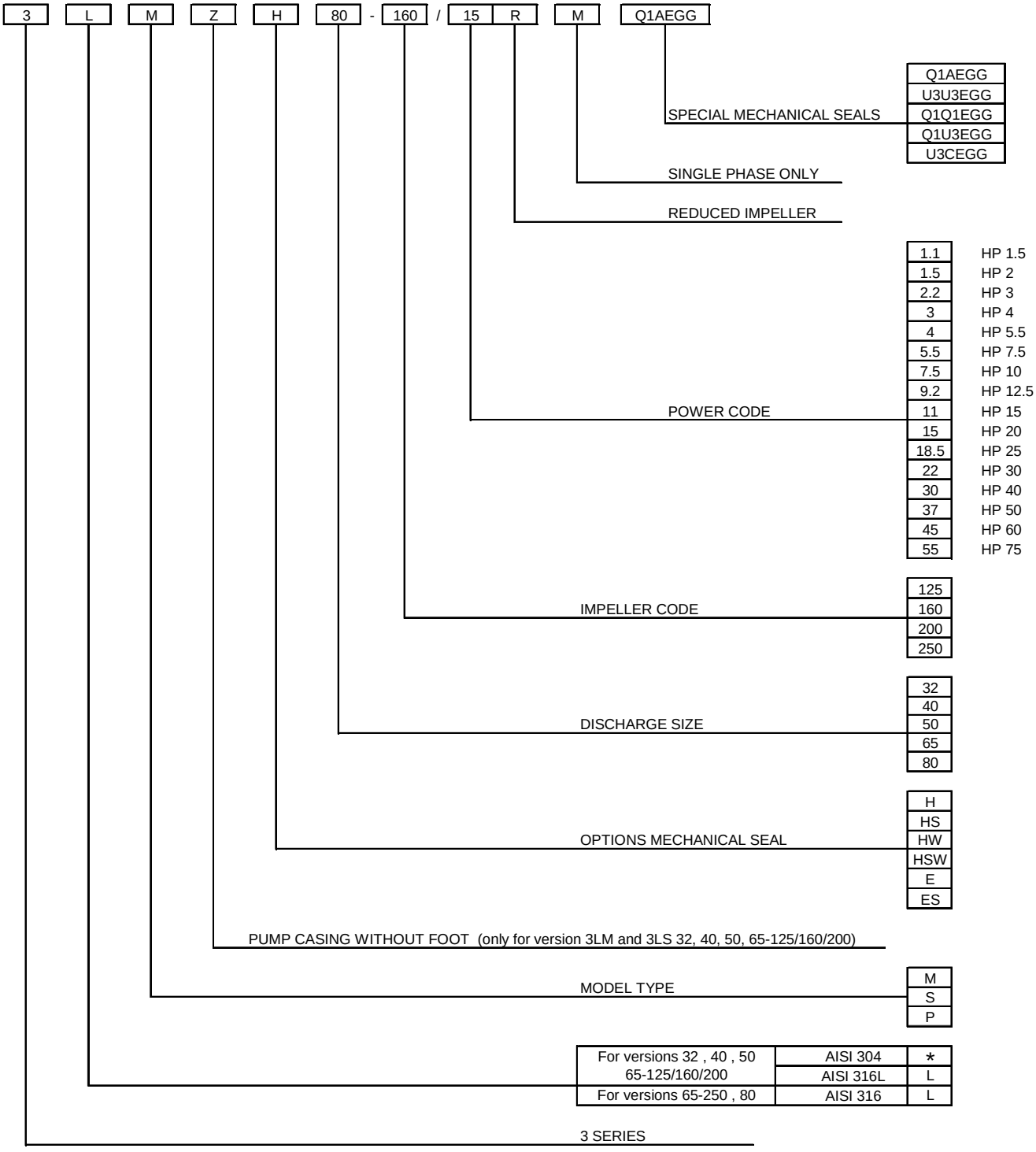

*) No indication

BOONSUNGNOEN PUMP&VALVE (THAILAND) CO.,LTD.
55/52 Moo.2, Ban Chang, Muang Pathumthani, Pathum Thani 12000
Tel.02-581-1280(Auto.5Line.) Email : bsn.chemtai@gmail.com

TYPE KEY AND CURVE SPECIFICATIONS

50Hz

Rev. V

PERFORMANCE CURVE SPECIFICATIONS

The specifications below qualify the curves shown on the following pages.

Tolerances according to ISO 9906:2012 - Grade 3B
The curves refer to effective speed of asynchronous motors at 50 Hz, 2 poles.
Measurements were carried out with clean water at 20℃ of temperature and with a kinematic viscosity of $\nu = 1\ mm^2/s$ (1 cSt)

The NPSH curve is an average curve obtained in the same conditions of performance curves.
The continuous curves indicate the recommended working range. The dotted curve is only a guide.
In order to avoid the risk of over-heating, the pumps should not be used at a flow rate below 10% of best efficiency point.

Symbols explanation:

Q	=	volume flow rate
H	=	total head
P_2	=	pump power input (shaft power)
η	=	pump efficiency
NPSH	=	net positive suction head required by the pump
MEI	=	minimum efficiency index

BOONSUNGNOEN PUMP&VALVE (THAILAND) CO.,LTD.
55/52 Moo.2, Ban Chang, Muang Pathumthani, Pathum Thani 12000
Tel.02-581-1280(Auto.5Line.) Email : bsn.chemtai@gmail.com

MEI INDEX SPECIFICATION

The minimum efficiency index (MEI) is a measure of the quality of a pump size in respect to its mean efficiency. The minimum efficiency index is based on the hydraulic efficiency and on the head at the best efficiency point.

The efficiency of a pump with trimmed impeller is usually lower than that of a pump with the full impeller diameter. The trimming of the impeller will adapt the pump to a fixed duty point,leading to a reduced energy consumption. The minimum efficiency index (MEI) is based on the full impeller diameter.

The operation of these water pumps with variabile duty points may be more efficient end economical when controlled, for example, by the use of a variable speed drive that matches the pump duty to the system.

MEI = 0.4 for ESCC 2900 rpm

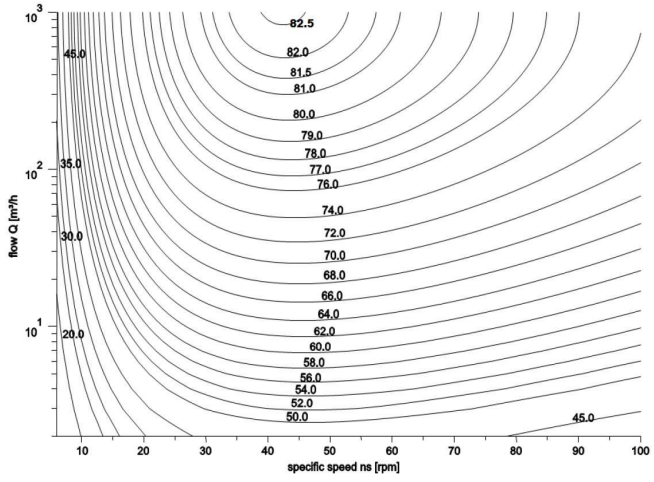

MEI = 0.7 for ESCC 2900rpm

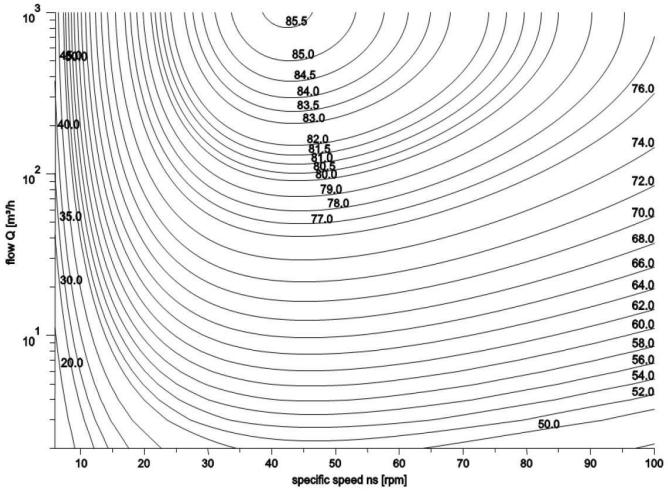

MEI = 0.4 for ESOB 2900 rpm

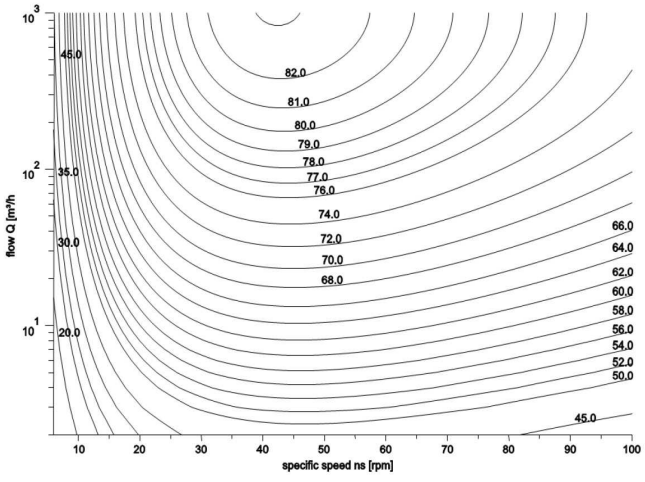

MEI = 0.7 for ESOB 2900rpm

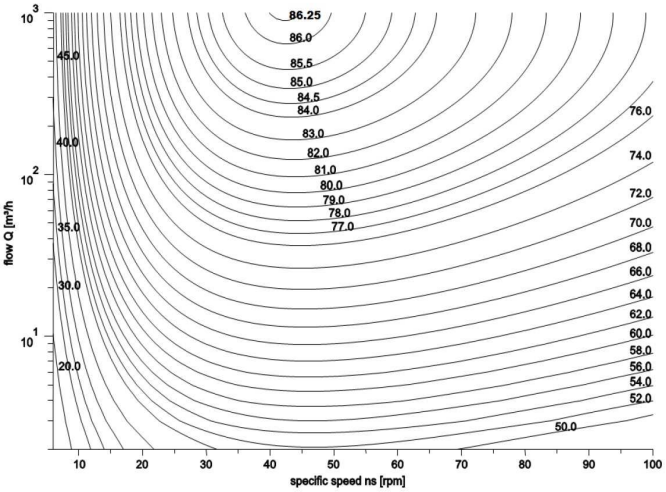

BOONSUNGNOEN PUMP&VALVE (THAILAND) CO.,LTD.
55/52 Moo.2, Ban Chang, Muang Pathumthani, Pathum Thani 12000
Tel.02-581-1280(Auto.5Line.) Email : bsn.chemtai@gmail.com

PERFORMANCE CURVE

50Hz

Rev. V

32-125/1.1 (1.1kW) MEI > 0.40 – impeller diameter = 133 mm

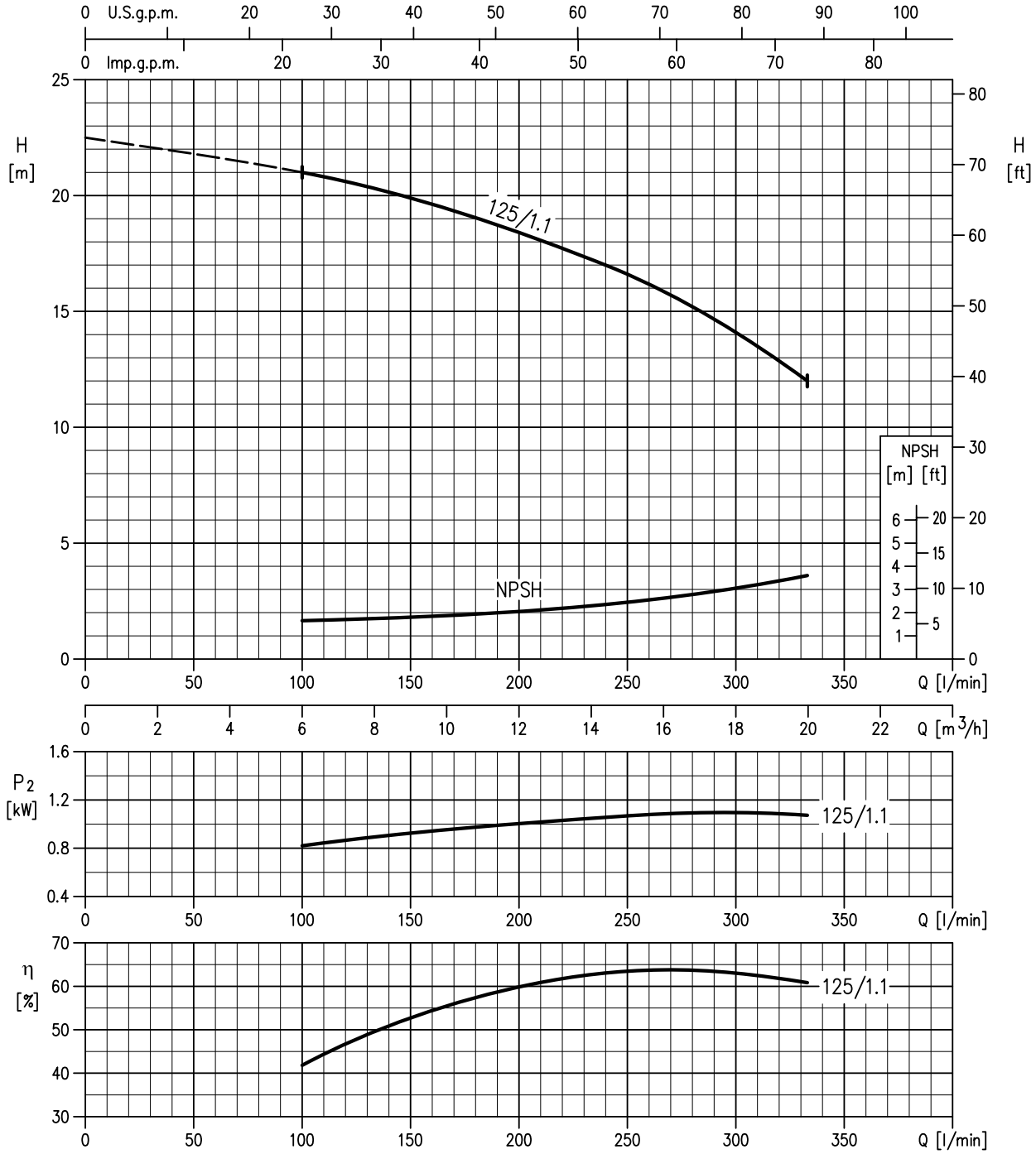

Rotation speed ≈ 2900 min^{-1}

Test standard: ISO 9906:2012 - Grade 3B

BOONSUNGNOEN PUMP&VALVE (THAILAND) CO.,LTD.
55/52 Moo.2, Ban Chang, Muang Pathumthani, Pathum Thani 12000
Tel.02-581-1280(Auto.5Line.) Email : bsn.chemtai@gmail.com

PERFORMANCE CURVE

50Hz

Rev. V

32-160/1.5 (1.5kW) MEI > 0.70 – impeller diameter = 151 mm
32-160/2.2 (2.2kW) MEI > 0.70 – impeller diameter = 166 mm

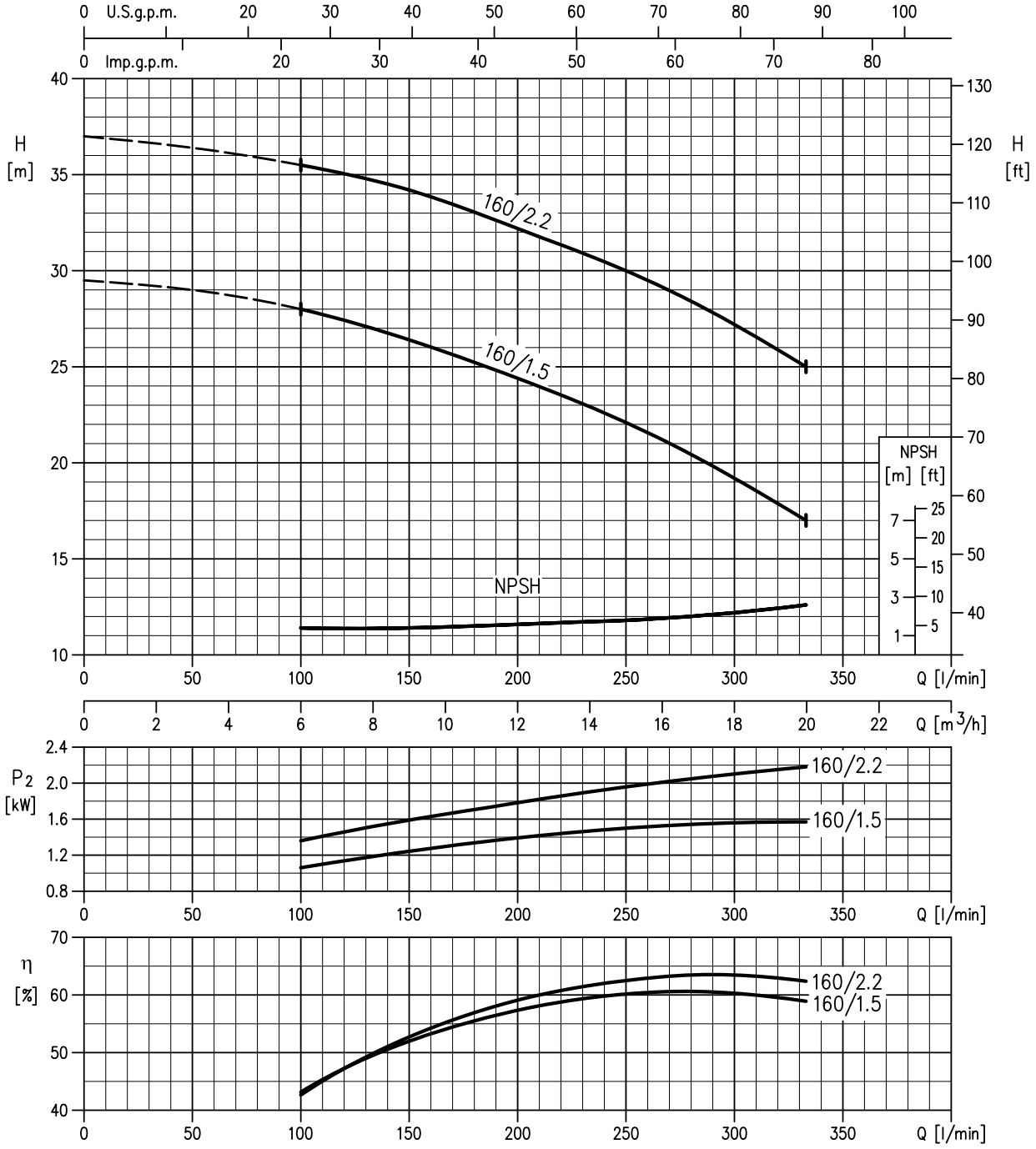

Rotation speed ≈ 2900 min^{-1}
Test standard: ISO 9906:2012 - Grade 3B

BOONSUNGNOEN PUMP&VALVE (THAILAND) CO.,LTD.
55/52 Moo.2, Ban Chang, Muang Pathumthani, Pathum Thani 12000
Tel.02-581-1280(Auto.5Line.) Email : bsn.chemtai@gmail.com

PERFORMANCE CURVE

50Hz

Rev. V

32-200/3 (3.0kW) MEI > 0.70 – impeller diameter = 186 mm
32-200/4 (4.0kW) MEI > 0.70 – impeller diameter = 200 mm
32-200/5.5 (5.5kW) MEI > 0.70 – impeller diameter = 224 mm
32-200/7.5 (7.5kW) MEI > 0.70 – impeller diameter = 224 mm

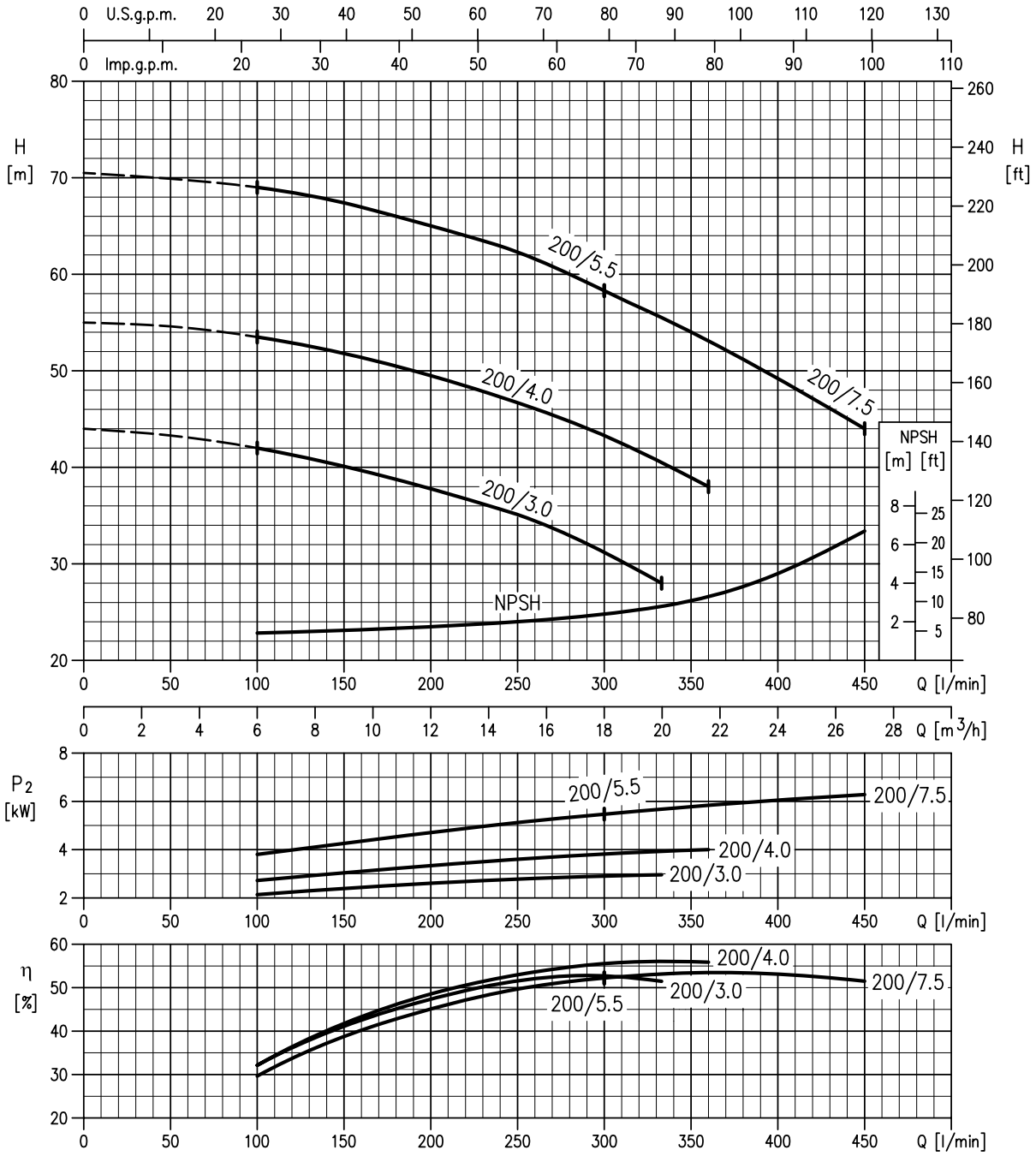

Rotation speed ≈ 2900 min^{-1}
Test standard: ISO 9906:2012 - Grade 3B

BOONSUNGNOEN PUMP&VALVE (THAILAND) CO.,LTD.
55/52 Moo.2, Ban Chang, Muang Pathumthani, Pathum Thani 12000
Tel.02-581-1280(Auto.5Line.) Email : bsn.chemtai@gmail.com

PERFORMANCE CURVE

50Hz

Rev. V

40-125/1.5 (1.5kW) MEI > 0.70 – impeller diameter = 125 mm
40-125/2.2 (2.2kW) MEI > 0.70 – impeller diameter = 140 mm

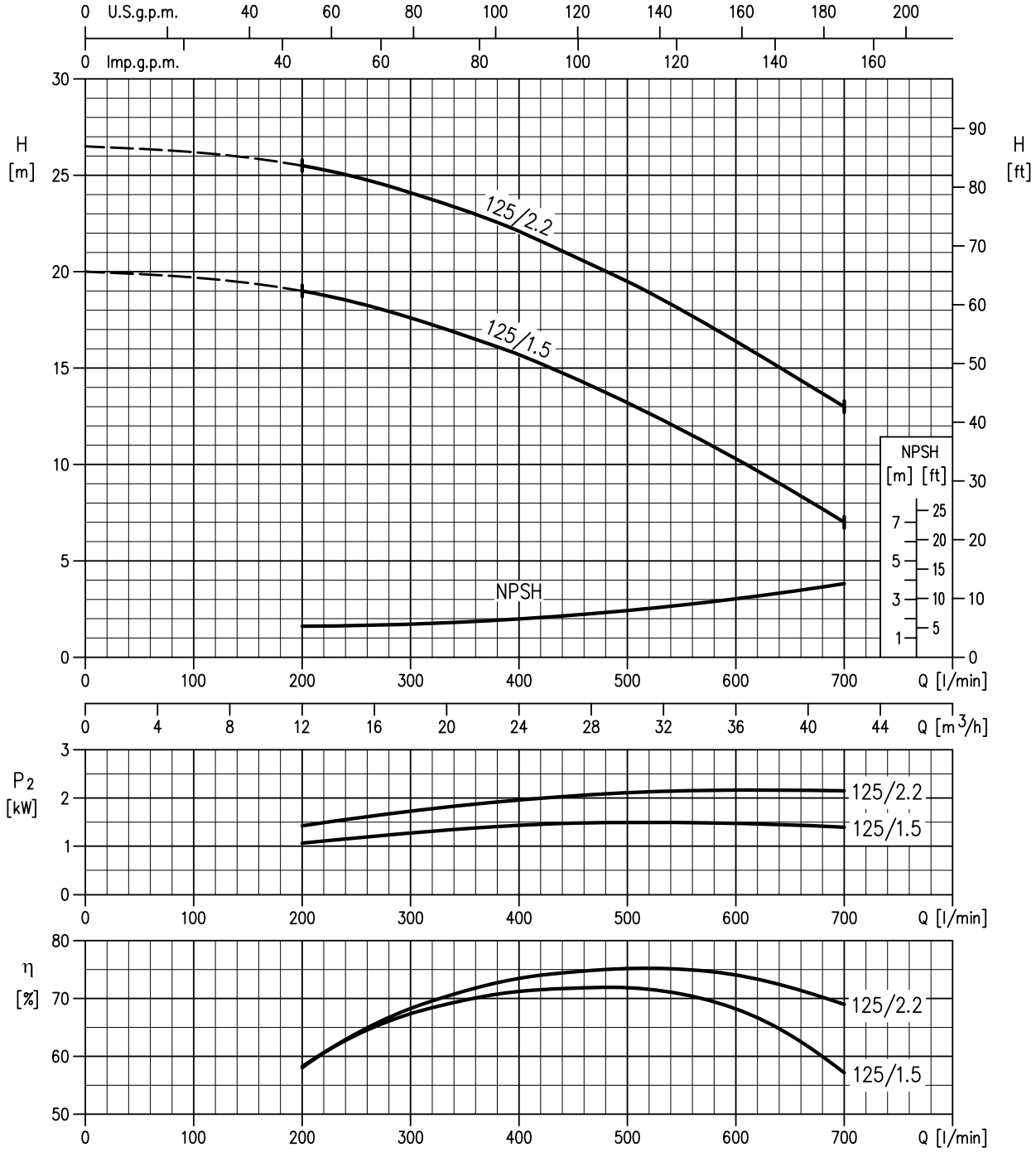

Rotation speed ≈ 2900 min^{-1}
Test standard: ISO 9906:2012 - Grade 3B

PERFORMANCE CURVE

50Hz

Rev. V

40-160/3 (3.0kW) MEI > 0.70 – impeller diameter = 151 mm
40-160/4 (4.0kW) MEI > 0.70 – impeller diameter = 166 mm

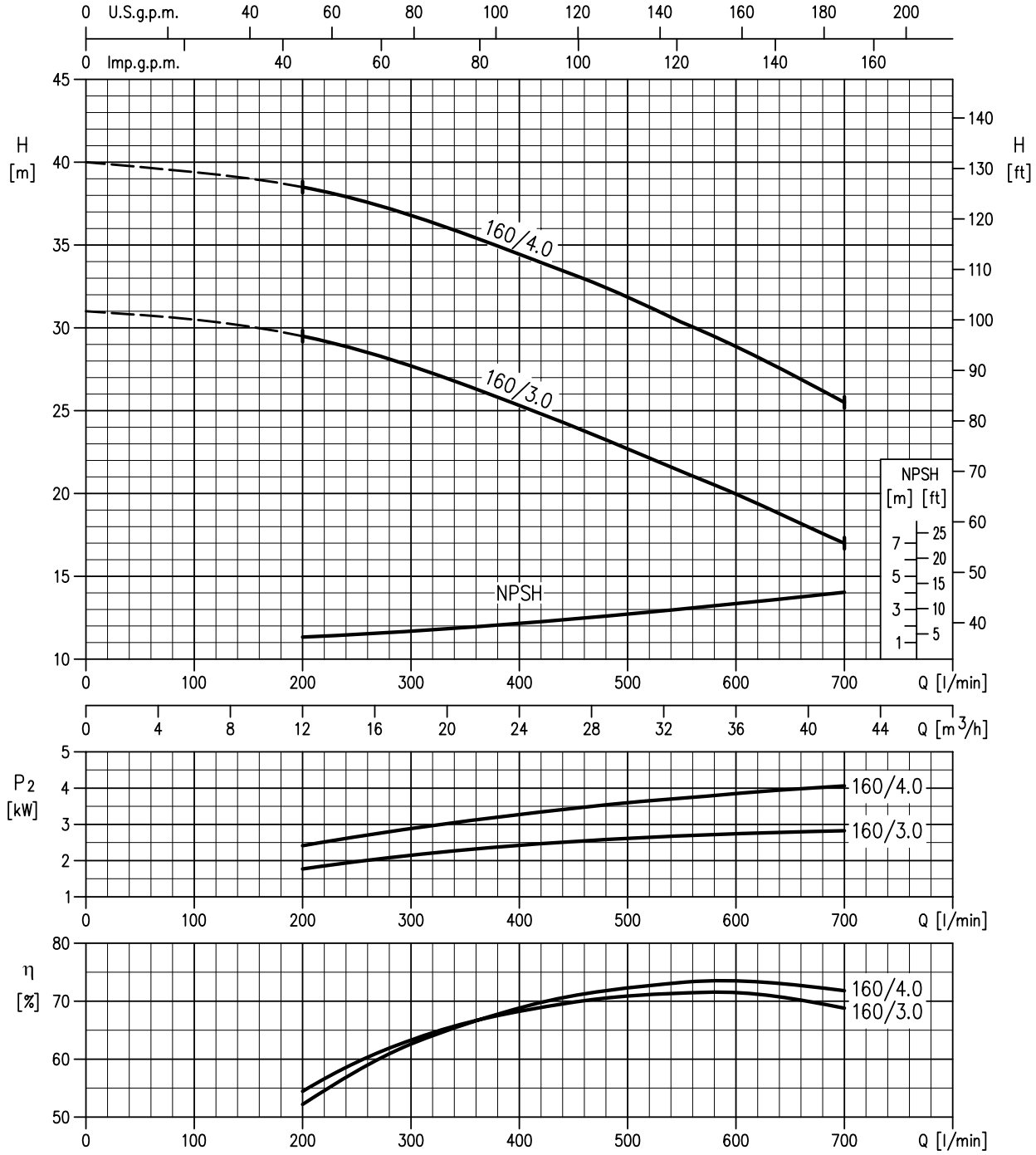

Rotation speed ≈ 2900 min^{-1}
Test standard: ISO 9906:2012 - Grade 3B

PERFORMANCE CURVE

50Hz

Rev. V

40-200/5.5 (5.5kW) MEI > 0.70 – impeller diameter = 183 mm
40-200/7.5 (7.5kW) MEI > 0.70 – impeller diameter = 200 mm
40-200/11 (11kW) MEI > 0.70 – impeller diameter = 224 mm

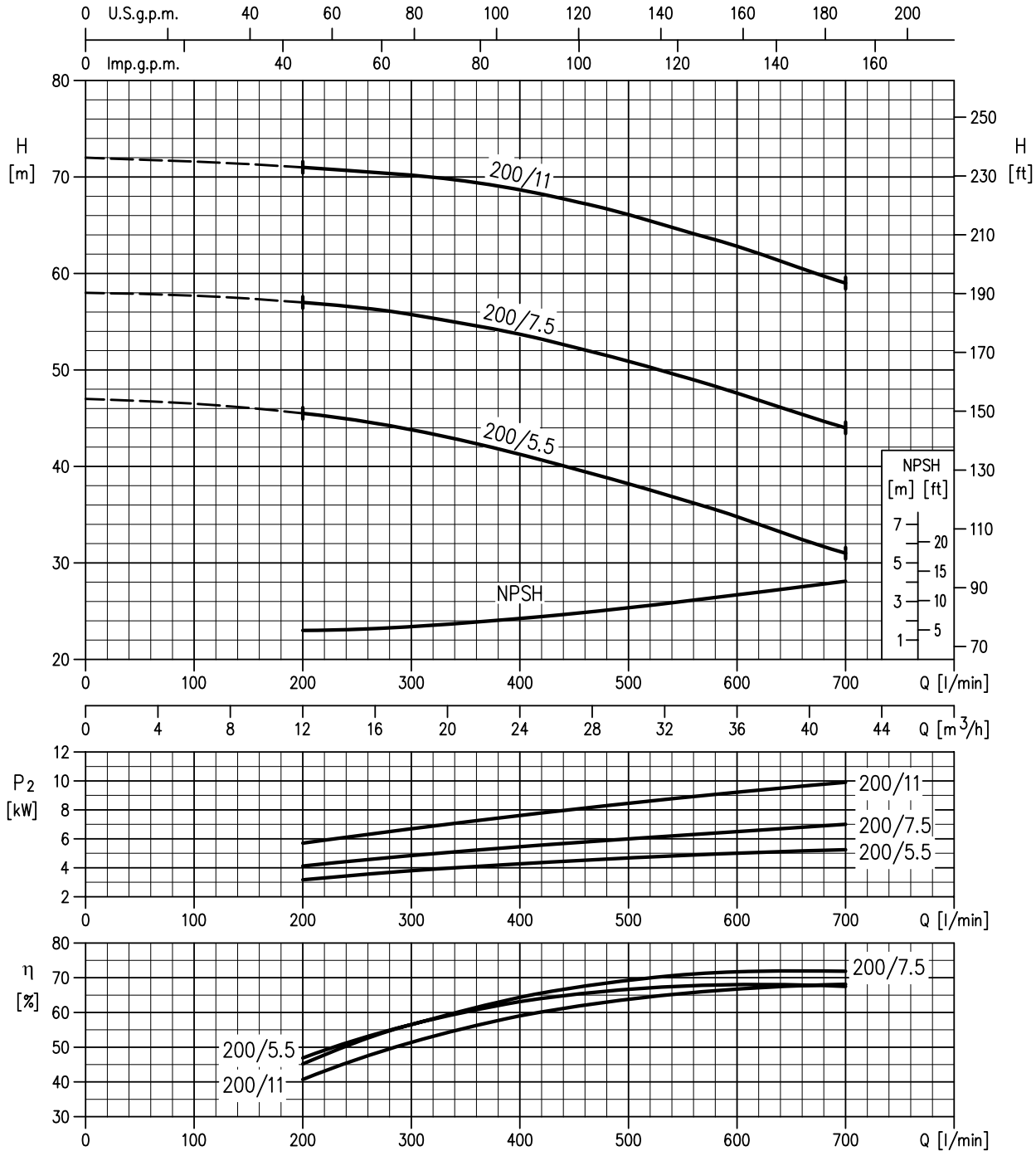

Rotation speed ≈ 2900 min^{-1}
Test standard: ISO 9906:2012 - Grade 3B

PERFORMANCE CURVE

50Hz

Rev. V

50-125/2.2 (2.2kW) MEI > 0.50 – impeller diameter = 126 mm
50-125/3 (3.0kW) MEI > 0.50 – impeller diameter = 131 mm
50-125/4 (4.0kW) MEI > 0.50 – impeller diameter = 140 mm

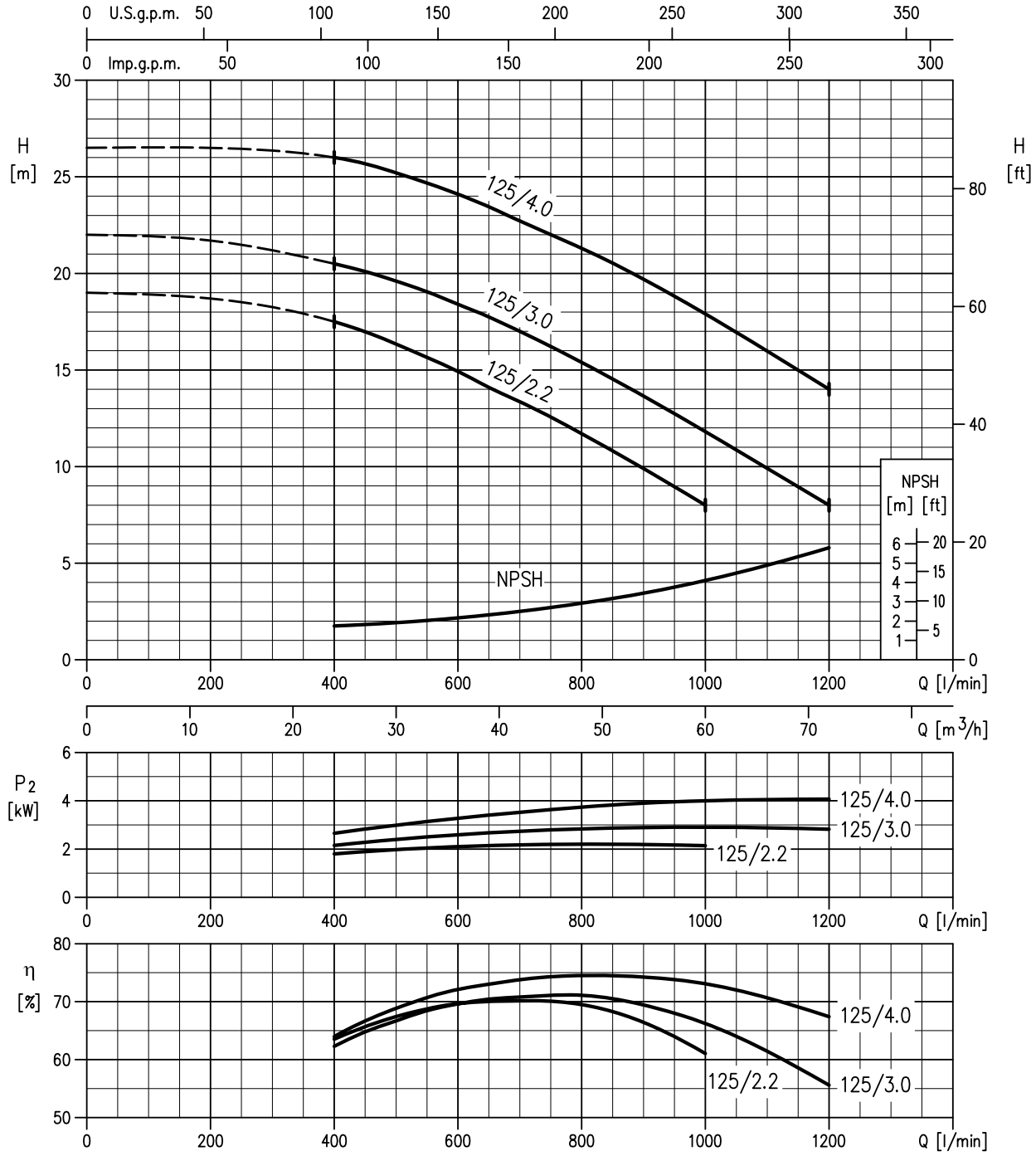

Rotation speed ≈ 2900 min^{-1}
Test standard: ISO 9906:2012 - Grade 3B

PERFORMANCE CURVE

50Hz

Rev. V

50-160/5.5 (5.5kW) MEI > 0.40 – impeller diameter = 154 mm
50-160/7.5 (7.5kW) MEI > 0.40 – impeller diameter = 166 mm

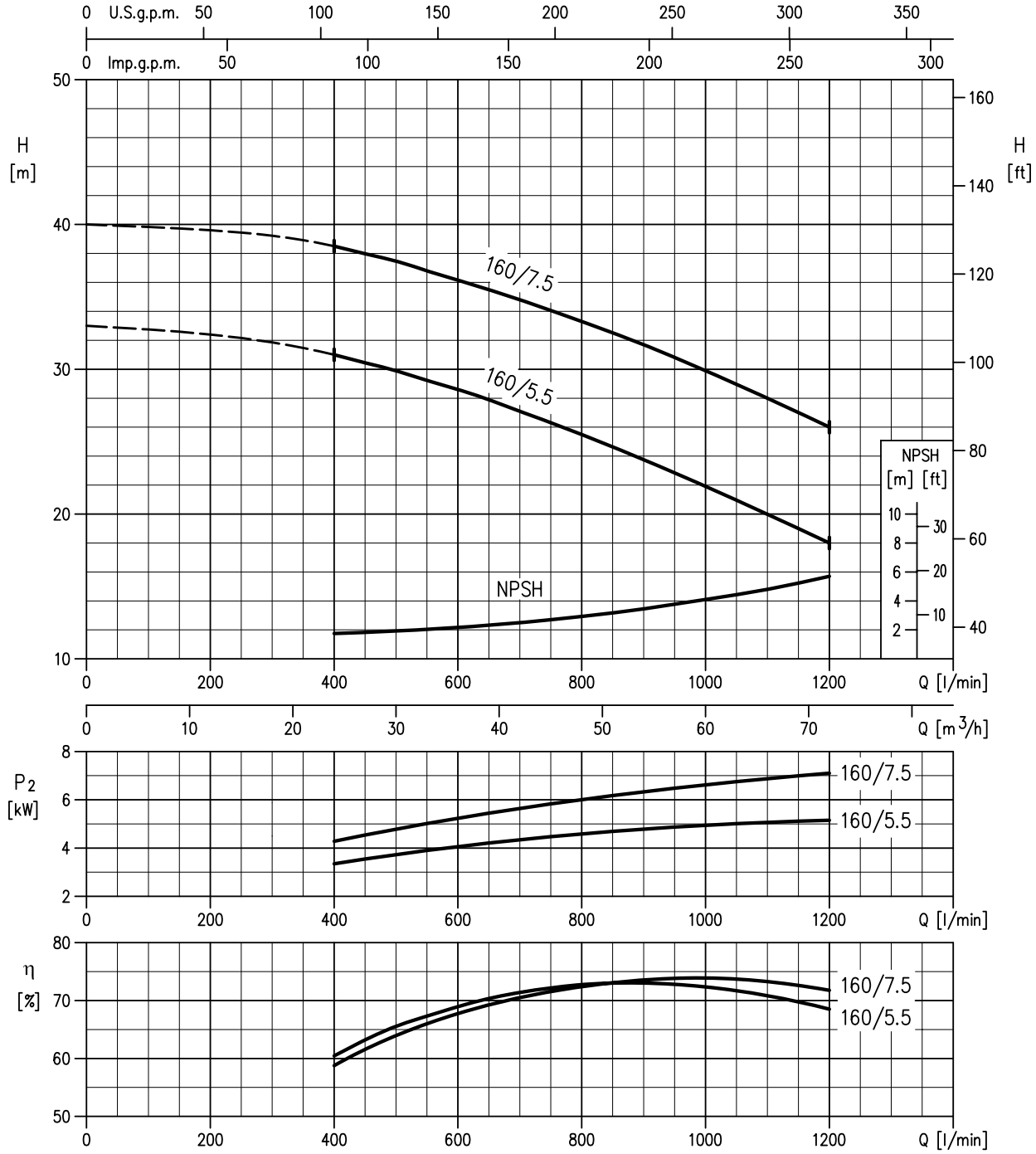

Rotation speed ≈ 2900 min^{-1}
Test standard: ISO 9906:2012 - Grade 3B

PERFORMANCE CURVE

50Hz

Rev. V

50-200/9.2 (9.2kW) MEI > 0.70 – impeller diameter = 191 mm
50-200/11 (11kW) MEI > 0.70 – impeller diameter = 200 mm
50-200/15 (15kW) MEI > 0.40 – impeller diameter = 224 mm

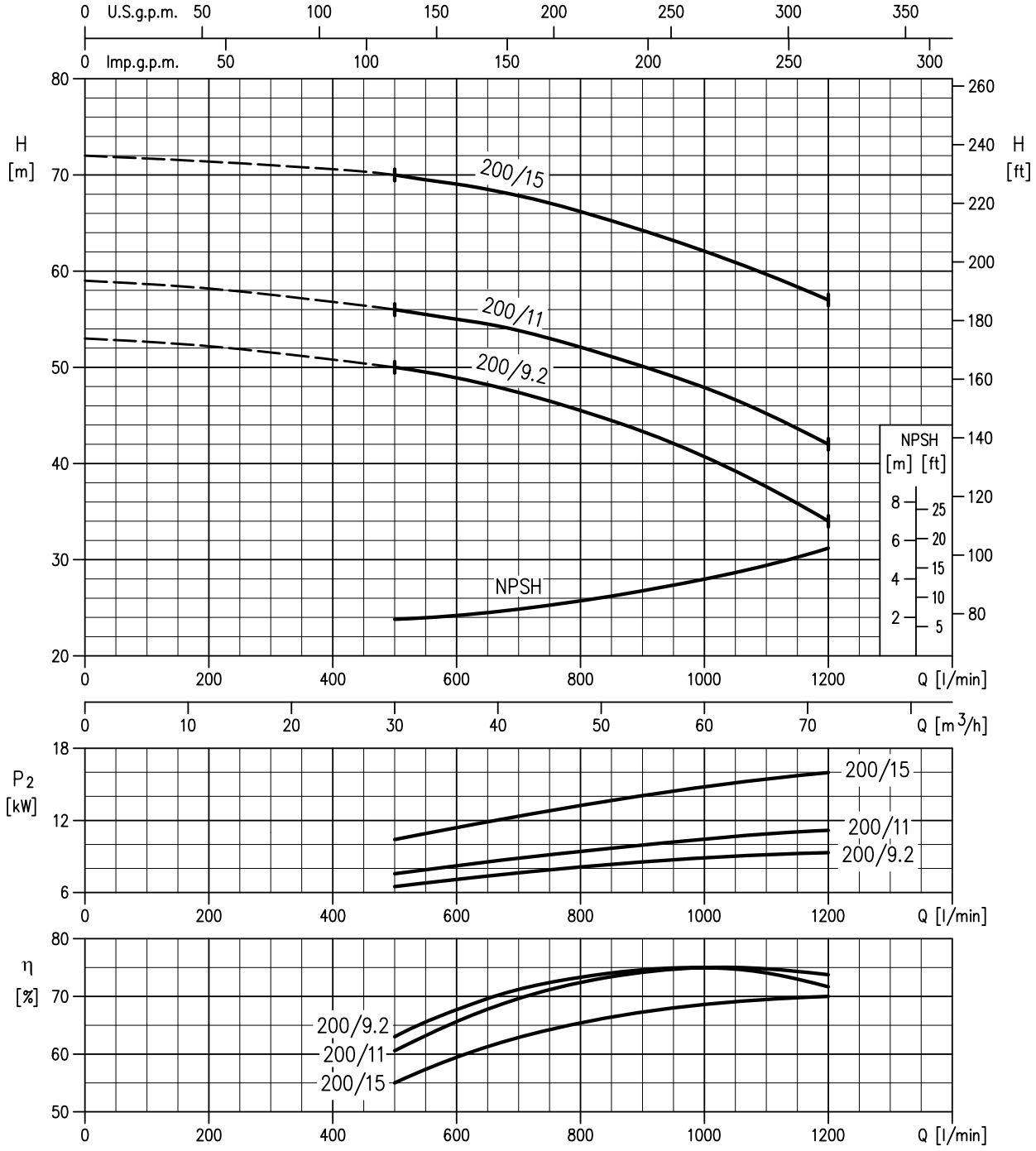

Rotation speed ≈ 2900 min^{-1}
Test standard: ISO 9906:2012 - Grade 3B

PERFORMANCE CURVE

50Hz

Rev. V

65-125/4 (4.0kW) MEI > 0.50 – impeller diameter = 128 mm
65-125/5.5 (5.5kW) MEI > 0.50 – impeller diameter = 138 mm
65-125/7.5 (7.5kW) MEI > 0.50 – impeller diameter = 149 mm

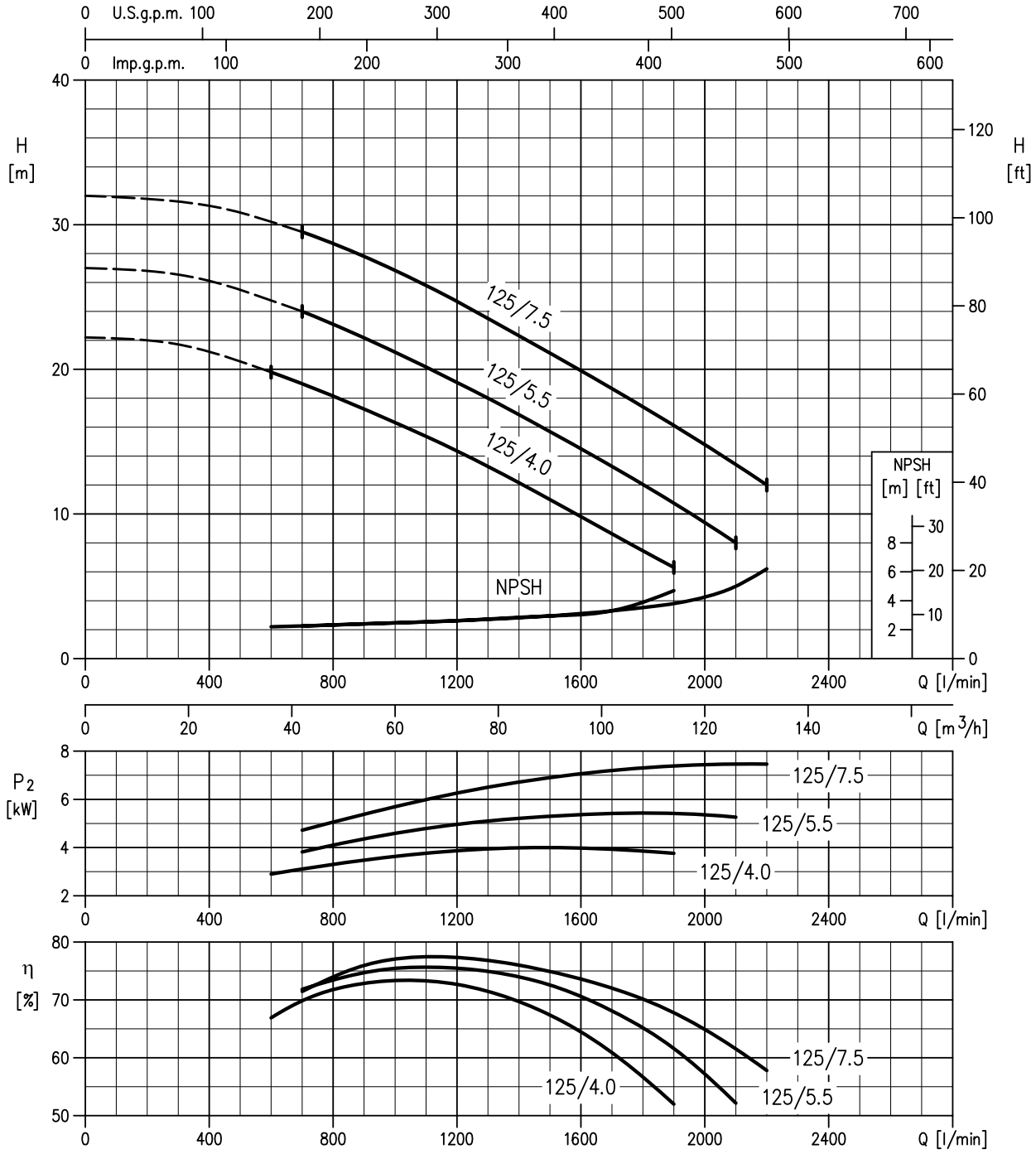

Rotation speed ≈ 2900 min^{-1}
Test standard: ISO 9906:2012 - Grade 3B

PERFORMANCE CURVE

50Hz

Rev. V

65-160/7.5 (7.5kW) MEI > 0.70 – impeller diameter = 153 mm
65-160/9.2 (9.2kW) MEI > 0.70 – impeller diameter = 161 mm
65-160/11 (11kW) MEI > 0.70 – impeller diameter = 168 mm
65-160/15 (15kW) MEI > 0.70 – impeller diameter = 178 mm

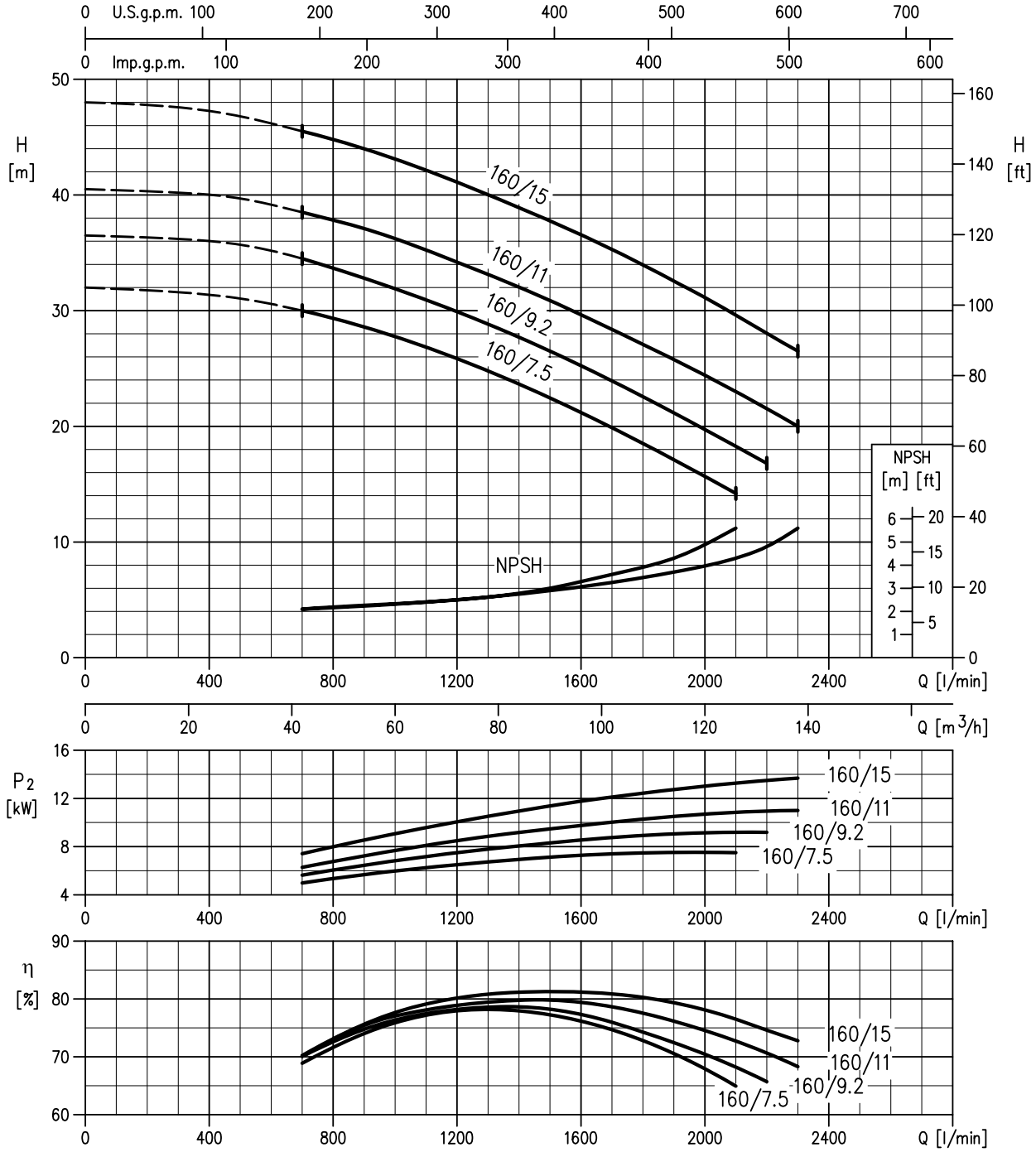

Rotation speed ≈ 2900 min^{-1}

Test standard: ISO 9906:2012 - Grade 3B

PERFORMANCE CURVE

50Hz

Rev. V

65-200/15 (15kW) MEI > 0.70 – impeller diameter = 190 mm
65-200/18.5 (18.5kW) MEI > 0.70 – impeller diameter = 201 mm
65-200/22 (22kW) MEI > 0.70 – impeller diameter = 212 mm

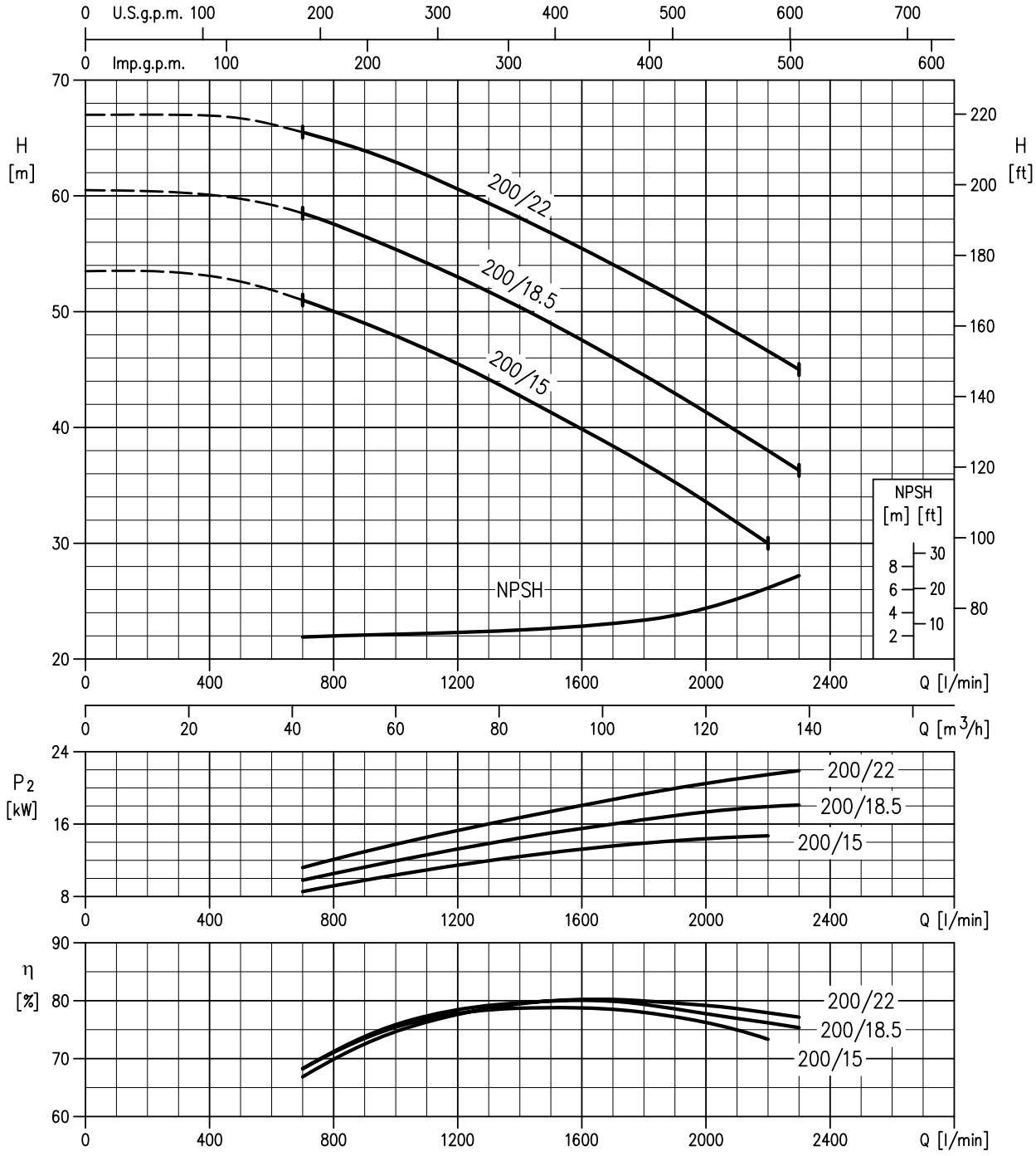

Rotation speed ≈ 2900 min^{-1}
Test standard: ISO 9906:2012 - Grade 3B

PERFORMANCE CURVE

50Hz

Rev. V

65-250/30 (30kW) MEI > 0.70 – impeller diameter = 235 mm
65-250/37 (37kW) MEI > 0.70 – impeller diameter = 250 mm

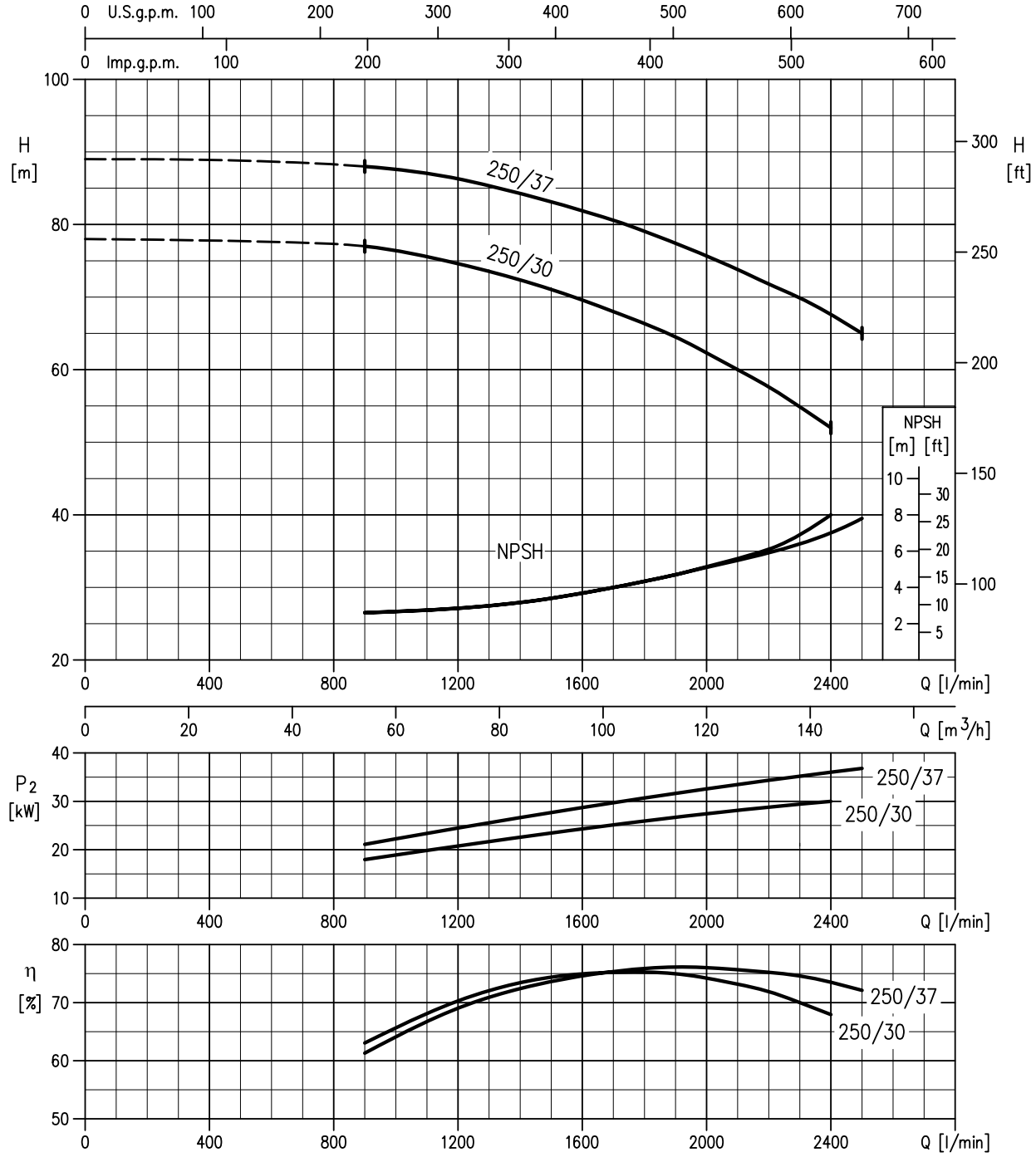

Rotation speed ≈ 2900 min^{-1}
Test standard: ISO 9906:2012 - Grade 3B

PERFORMANCE CURVE

50Hz

Rev. V

80-160/11 (11kW) MEI > 0.70 – impeller diameter = 154 mm
80-160/15R (15kW) MEI > 0.70 – impeller diameter = 160 mm
80-160/15 (15kW) MEI > 0.70 – impeller diameter = 165 mm
80-160/18.5 (18.5kW) MEI > 0.70 – impeller diameter = 174 mm

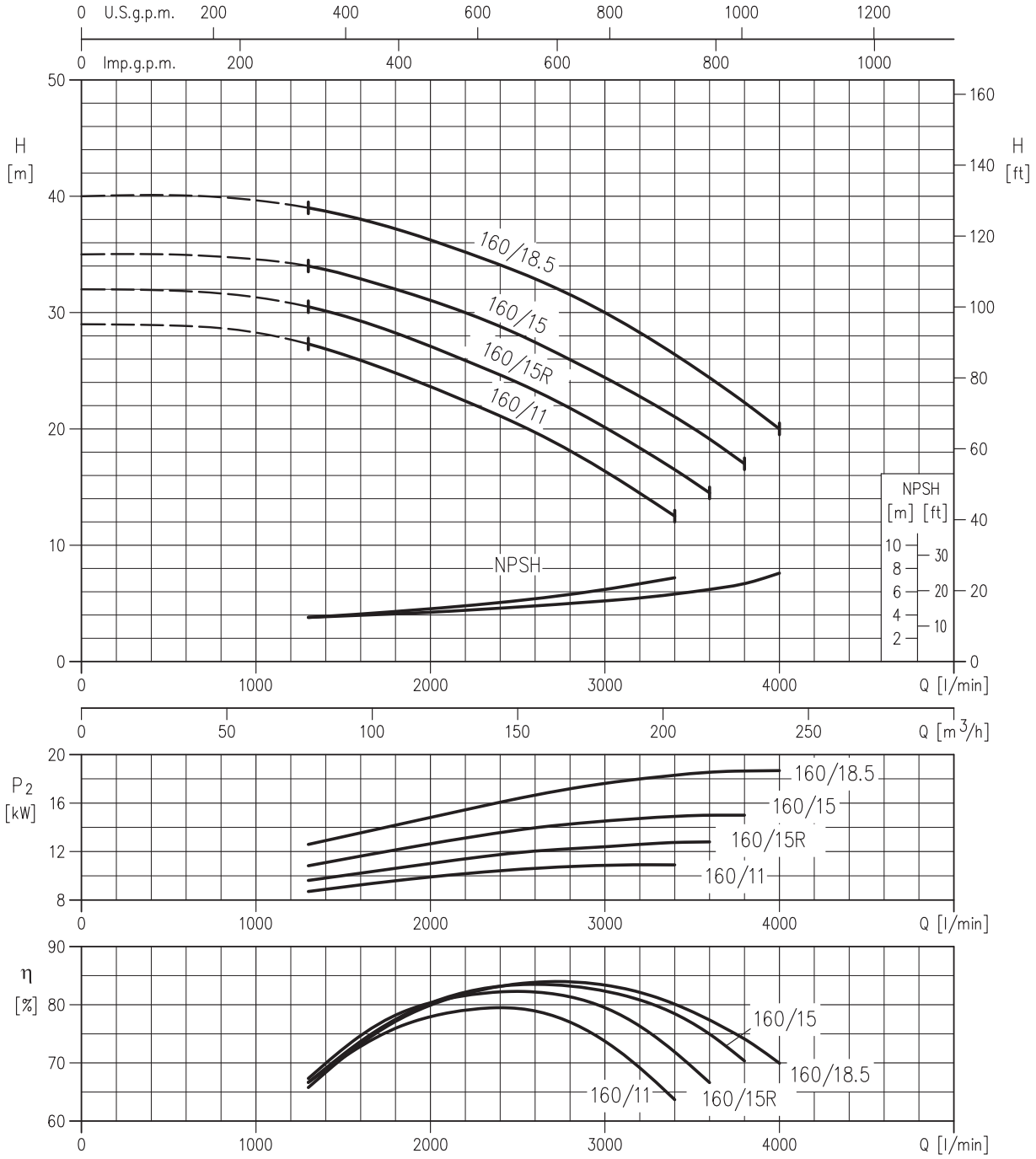

Rotation speed ≈ 2900 min^{-1}
Test standard: ISO 9906:2012 - Grade 3B

PERFORMANCE CURVE

50Hz

Rev. V

80-200/22 (22kW) MEI > 0.60 – impeller diameter = 196 mm
80-200/30 (30kW) MEI > 0.60 – impeller diameter = 211 mm
80-200/37 (37kW) MEI > 0.60 – impeller diameter = 219 mm

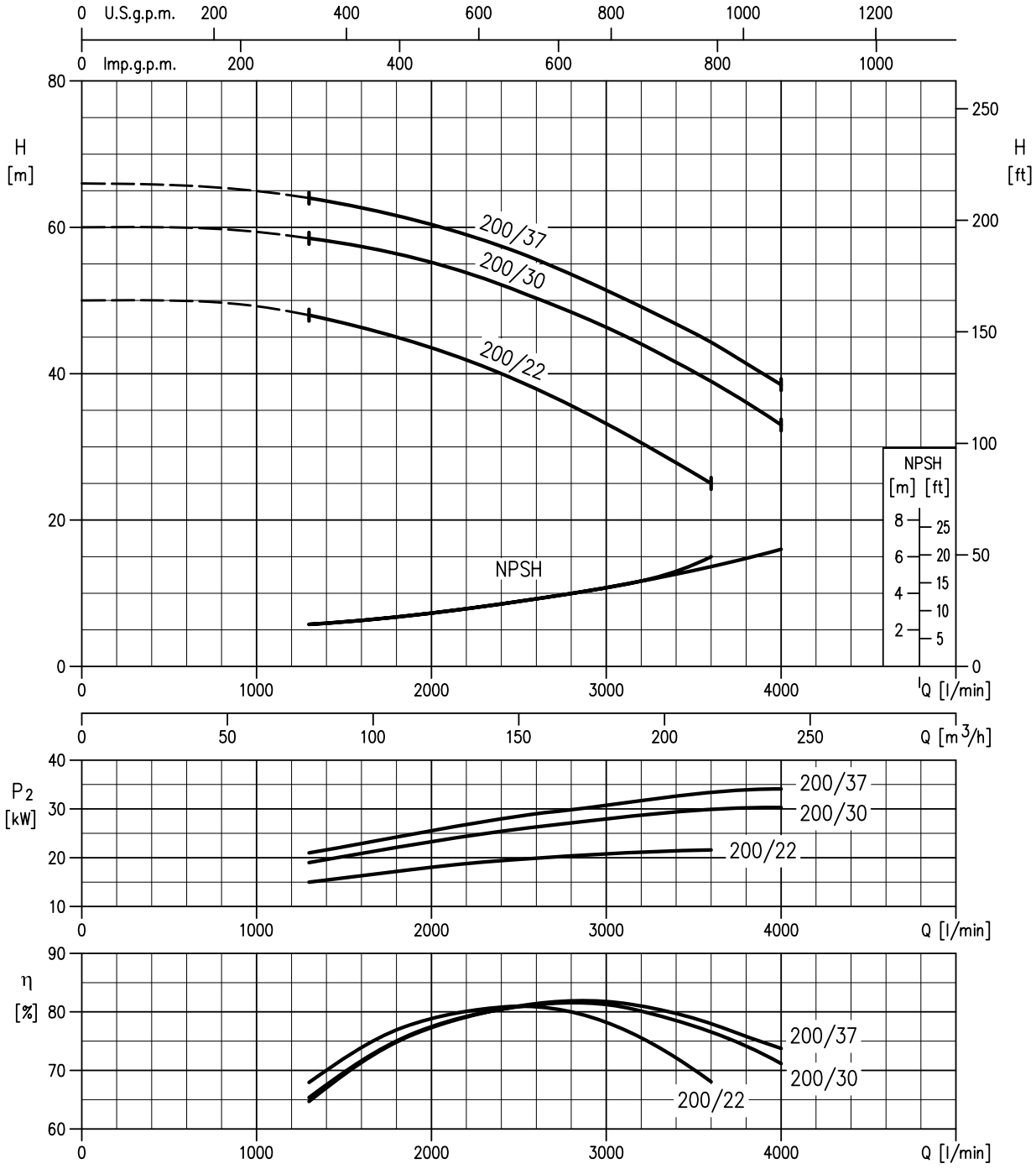

Rotation speed ≈ 2900 min^{-1}
Test standard: ISO 9906:2012 - Grade 3B

PERFORMANCE CURVE

50Hz

Rev. V

80-250/37 (37kW) MEI > 0.60 – impeller diameter = 230 mm
80-250/45 (45kW) MEI > 0.60 – impeller diameter = 245 mm
80-250/55 (55kW) MEI > 0.60 – impeller diameter = 259 mm

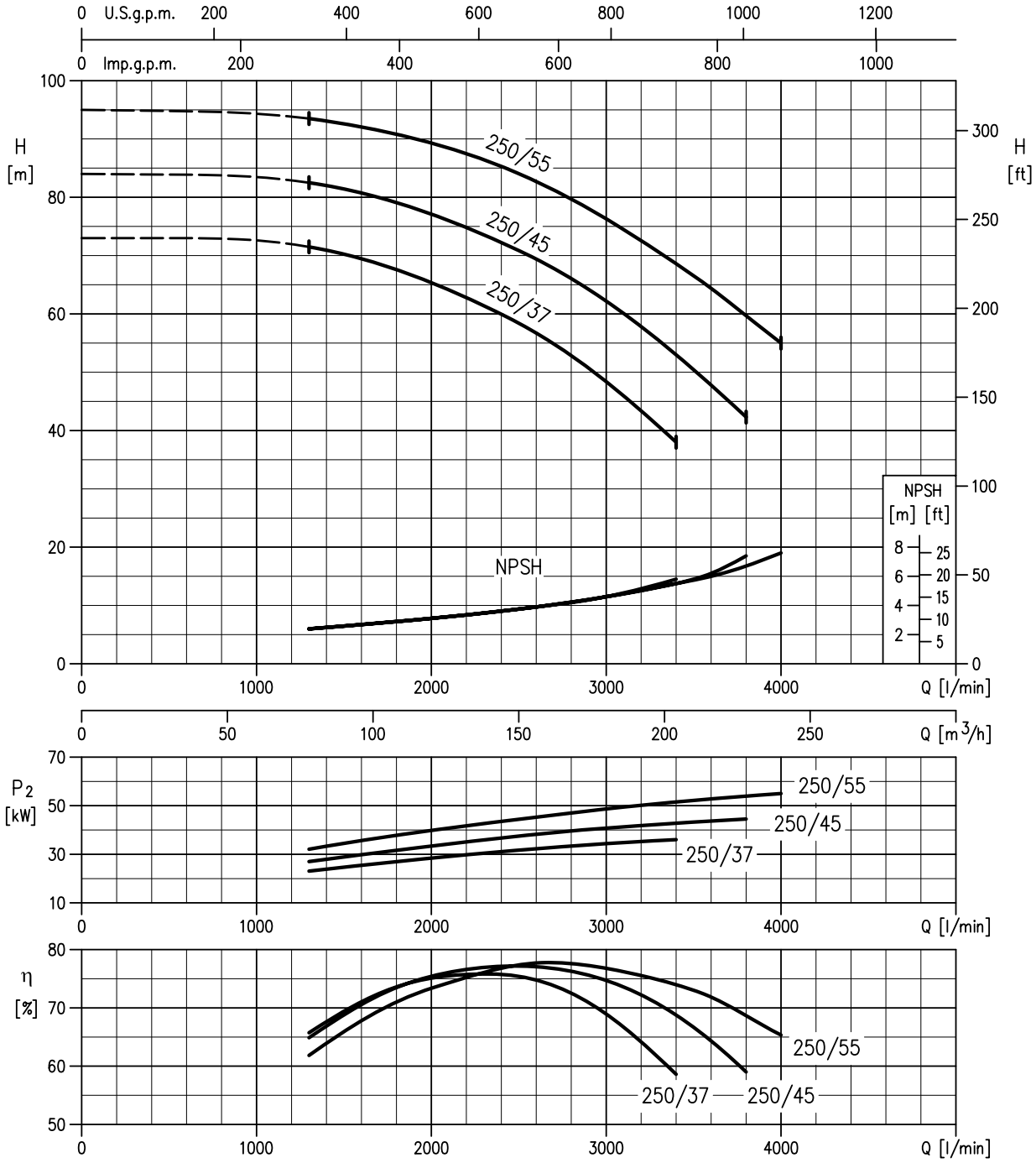

Rotation speed ≈ 2900 min^{-1}
Test standard: ISO 9906:2012 - Grade 3B

CONSTRUCTION

50Hz

Rev. V

SECTIONAL VIEW DRAWING 3(.)M 32, 40, 50, 65-125/160/200

UP TO 11 kW

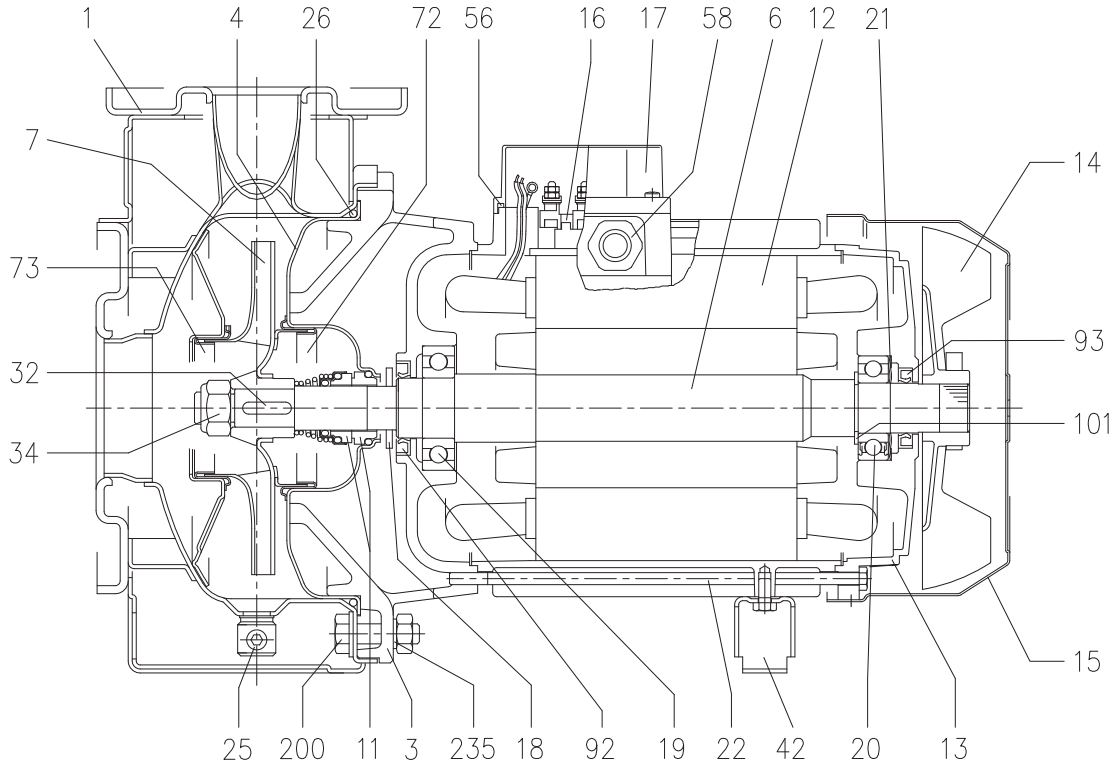

15 kW AND ABOVE

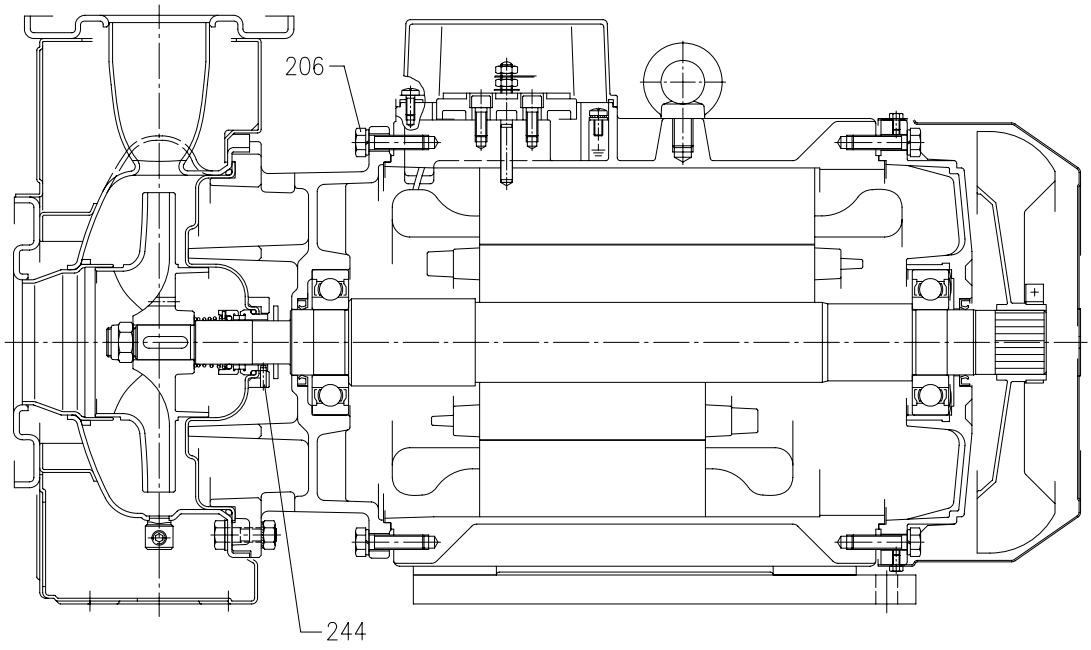

CONSTRUCTION

50Hz

Rev. V

SECTIONAL VIEW TABLE 3(.)M 32, 40, 50, 65-125/160/200

N°	PART NAME		MATERIAL 3M	MATERIAL 3LM	DIMENSIONS	STANDARD	Q.TY
1	Casing		EN 1.4301 (AISI 304)	EN 1.4404 (AISI 316L)			1
3	Motor bracket		[9]				1
4	Casing cover		EN 1.4301 (AISI 304)	EN 1.4404 (AISI 316L)			1
6	Shaft with rotor-Part in contact with liquid		EN 1.4301 (AISI 304)	EN 1.4404 (AISI 316L)			1
7	Impeller		EN 1.4301 (AISI 304)	EN 1.4404 (AISI 316L)			1
11	Mechanical seal		Carbon/Ceramic/NBR	SiC/SiC/FPM	[8]		1
12	Motor frame with stator		-				1
13	Motor cover		Aluminium				1
14	Fan		PA				1
15	Fan cover		Fe P04 Galvanized				1
16	Terminal		-				1
17	Terminal box cover		Aluminium (three phase version)				1
18	Splash ring	Up to 11 kW	NBR	/	40x21.5x3	EBARA DRAWING	1
		15 kW and above			50x29.5x3		
19	Bearing		-		See table p.324		1
20	Bearing		-		See table p.324		1
21	Adjusting ring		Steel C70				1
22	Tie rod	Up to 3 kW	Fe 42 Galvanized		M5	EBARA DRAWING	4
		For 4 - 5.5 - 7.5 kW			M6		
		9.2 e 11kW			M8		
	Screw	15 kW and above	Galvanized Steel 8.8 strenght class ISO 898-1		M10x40	UNI 5739	
25	Draing plug		EN 1.4401 (AISI 316) / PTFE		R 1/8" L=8	DIN 906	1
26	"O" ring	32-125, 40-125	NBR [7]	FPM	158.11x5.34	OR 6625	1
		32-160, 40-160, 50-125			183.52x5.34	OR 6720	
		32-200, 40-200, 50-160, 50-200, 65-160, 65-200			227.96x5.34	OR 6895	
32	Key	Up to 11 kW	EN 1.4401 (AISI 316)		A 6x6x25	UNI 6604	1
		15 kW and above			A 8x7x30		
34	Impeller nut	Up to 11kW	EN 1.4301 (AISI 304)	EN 1.4404 (AISI 316L)	M16x1.5	UNI 7474	1
		50-200/15			M18x1.5		
		15 kW and above			M20x1.5		
42	Foot		Aluminium / Galvanized steel			EBARA DRAWING	[1]
56	Box gasket		NBR				1
58	Fasting nut		-				[2]
72	Casing ring	[3]	EN 1.4301 (AISI 304)	EN 1.4404 (AISI 316L)			1
73	Casing ring		EN 1.4301 (AISI 304)	EN 1.4404 (AISI 316L)			1
92	Lip seal	Up to 3kW	-	-	25x40x7	DIN 3760 without spring	1
		From 4 to 7.5 kW			30x47X7		
		From 9.2 kW to 11 kW			40x55x7		
		From 15 kW to 22 kW			45x60x7		
93	Lip seal	Up to 4 kW	-	-	25x40x7	DIN 3760 without spring	1
		From 5.5 kW to 7.5 kW			30x47X7		
		From 9.2 kW to 11 kW			40x55x7		
		From 15 kW to 22 kW			45x60x7		
101	Snap ring (only 9.2 and 11kW)		Carbon tool steels TC 80		Ø 40	UNI 7435	1
200	Screw	32-125, 40-125	Stainless steel A2 70 class ISO 3506/1		M 8x30	UNI 5739	8
		40-160, 40-200, 50-125, 50-160, 50-200, 65-125, 65-160, 65-200			M 10x35		[4]
235	Washer	32-125, 40-125	EN 1.4301 (AISI 304)		8.4x17	UNI 6592	8
		40-160, 40-200, 50-125, 50-160, 50-200, 65-125, 65-160, 65-201			10.5x21		[4]
206	Screw for bracket	[5]	Galvanized Steel 8.8 strenght class ISO 898-1		M 10x40	UNI 5739	4
244	Pin	[6]	-	EN 1.4301 (AISI 304)	4x15		1

Counterflange kit on request, see table p. 335-336

[1] Quantity =0 for 65-160/15
Quantity =1 for 32-40-50 and 65 up to 11kW
Quantity =2 for 65-200/15, 65-200/18.5, 65-200/22
[2] Quantity =1 up to 11kW
Quantity =2 from 15kW to 22kW
[3] For version 32-200/3, 32-200/4, 32-200/5.5, 40-200/5.5, 40-200/7.5, 40-200/11, 50-160/5.5, 50-160/7.5, 50-200/9.2, 50-200/11, 50-200/15
[4] Quantity =10 for 32-160, 40-160, 50-125, 65-125
Quantity =12 for 32-200, 40-200, 50-160, 50-200, 65-160, 65-200
[5] For 15kW and above
[6] Only for 65-160/15 and 65-200
[7] FPM for H-HS-HW-HSW version
EPDM for E version, Q1AEGG, Q1Q1EGG, Q1U3EGG, U3CEGG, U3U3EGG
(U3U3EGG not available for 65-160/15 and 65-200)
[8] Special version: see page 326 and following
[9] Cast iron EN-GJL-200-EN 1561 for 32-200/3 and models with 15, 18.5, 22 kW motor
Aluminum AL-EN-1706-AC-46000-D for all the others.

CONSTRUCTION

50Hz

Rev. V

SECTIONAL VIEW DRAWING 3LMZ 32, 40, 50, 65-125/160/200

UP TO 11 kW

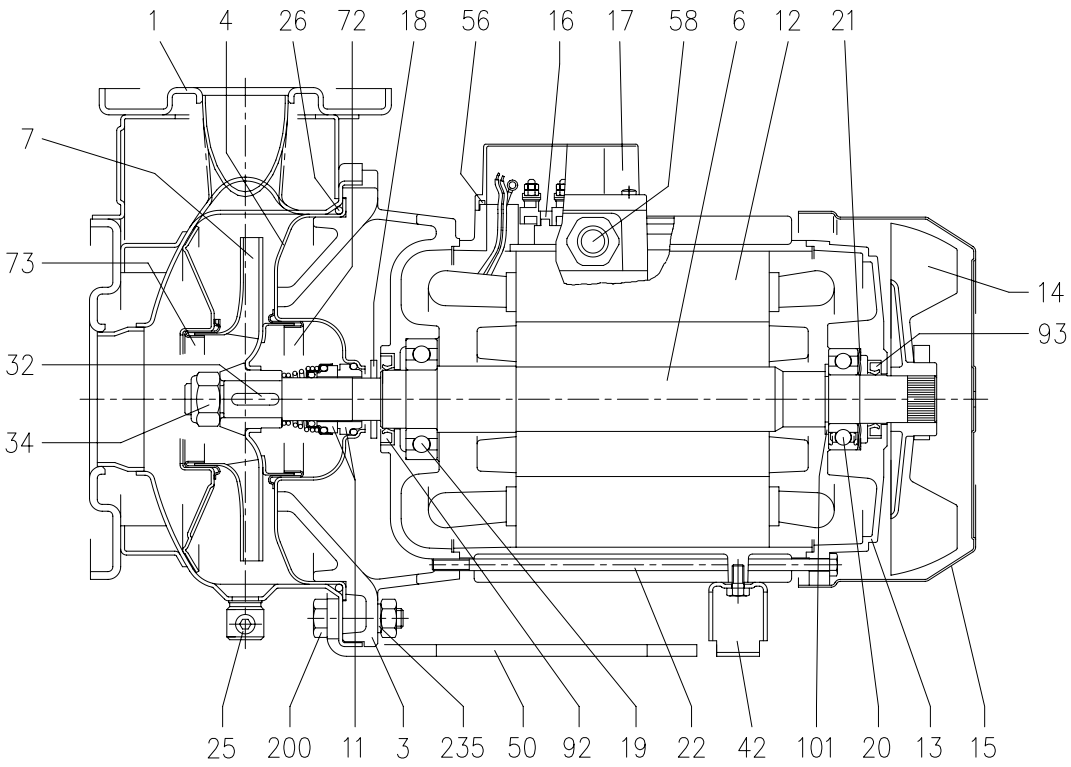

15 kW AND ABOVE

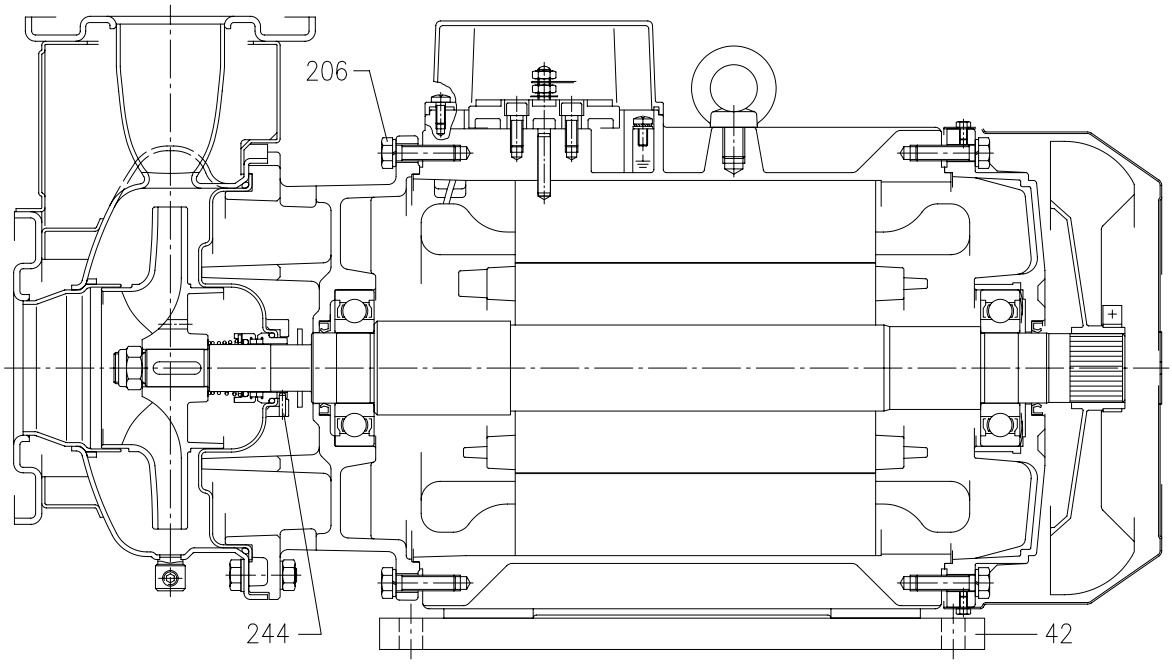

SECTIONAL VIEW TABLE 3LMZ 32, 40, 50, 65-125/160/200

N°	PART NAME		MATERIAL	DIMENSIONS	STANDARD	Q.TY
1	Casing		EN 1.4404 (AISI 316L)			1
3	Motor bracket		[8]			1
4	Casing cover		EN 1.4404 (AISI 316L)			1
6	Shaft with rotor-Part in contact with liquid		EN 1.4404 (AISI 316L)			1
7	Impeller		EN 1.4404 (AISI 316L)			1
11	Mechanical seal		SiC/SiC/FPM	[7]		1
12	Motor frame with stator		-			1
13	Motor cover		Aluminium			1
14	Fan		PA			1
15	Fan cover		Fe P04 Galvanized			1
16	Terminal		-			1
17	Terminal box cover		Aluminium			1
18	Splash ring	Up to 11 kW	/	40x21.5x3	EBARA DRAWING	1
		15 kW and above		50x29.5x3		
19	Bearing		-	See table p. 324		1
20	Bearing		-	See table p. 324		1
21	Adjusting ring		Steel C70			1
22	Tie rod	Up to 3 kW	Fe 42 Galvanized	M5	EBARA DRAWING	4
		For 4 - 5.5 - 7.5 kW		M6		
		9.2 e 11kW		M8		
	Screw	15 kW and above	Galvanized Steel 8.8	M10x40	UNI 5739	
25	Draing plug		AISI 316 / PTFE	R 1/8" L=8	DIN 906	1
26	"O" ring	32-125, 40-125	FPM	158.11x5.34	OR 6625	1
		32-160, 40-160, 50-125, 65-160		183.52x5.34	OR 6720	
		32-200, 40-200,50-160, 50-200, 65-160, 65-200		227.96x5.34	OR 6895	
32	Key	Up to 11 kW	EN 1.4401 (AISI 316)	A 6x6x25	UNI 6604	1
		15 kW and above		A 8x7x30		
34	Impeller nut	Up to 11kW	EN 1.4404 (AISI 316L)	M16x1.5	UNI 7474	1
		50-200/15		M18x1.5		
		15 kW and above		M20x1.5		
42	Foot		Al / Galvanized steel		EBARA DRAWING	[1]
50	Casing foot (only from 1.1 kW to 11 kW)		Galvanized steel			1
56	Box gasket		NBR			1
58	Fasting nut		-			[2]
72	Casing ring [3]		EN 1.4404 (AISI 316L)			1
73	Casing ring		EN 1.4404 (AISI 316L)			1
92	Lip seal	Up to 3kW	-	25x40x7	DIN 3760 without spring	1
		From 4 to 7.5 kW		30x47X7		
		From 9.2 kW to 11 kW		40x55x7		
		From 15 kW to 22 kW		45x60x7		
93	Lip seal	Up to 4 kW	-	25x40x7	DIN 3760 without spring	1
		From 5.5 kW to 7.5 kW		30x47X7		
		From 9.2 kW to 11 kW		40x55x7		
		From 15 kW to 22 kW		45x60x7		
101	Snap ring (only 9.2 and 11kW)		Carbon tool steels TC 80	Ø 40	UNI 7435	1
200	Screw	32-125, 40-125	Stainless steel A2 70 class ISO 3506/1	M8	UNI 5739	8
		40-160, 40-200, 50-125, 50-160, 50-200, 65-125, 65-160, 65-200		M10		[4]
235	Washer	32-125, 40-125	EN 1.4301 (AISI 304)	8.4x17	UNI 6592	8
		40-160, 40-200, 50-125, 50-160, 50-200, 65-125, 65-160, 65-201		10.5x21		[4]
206	Screw for bracket [5]		Galvanized Steel 8.8	M 10x40	UNI 5739	4+4
244	Pin [6]		EN 1.4301 (AISI 304)	4x15		1

Counterflange kit on request, see table p. 335-336

[1] Quantity =0 for 50-200/15 and 65-160/15
Quantity =1 for 32-200/7.5, 40-200/7.5/11, 50-160/7.5, 50-200/9.2/11, 65-125/7.5, 65-160/7.5/9.2/11
Quantity =2 for 65-200/15/18.5/22
[2] Quantity =1 up to 11kW
Quantity =2 from 15kW to 22kW
[3] For version 32-200/3/4/5.5, 40-200/5.5/7.5/11, 50-160/5.5/7.5, 50-200/9.2/11/15
[4] Quantity =10 for 32-160, 40-160, 50-125, 65-125
Quantity =12 for 32-200, 40-200, 50-160, 50-200, 65-160, 65-200
[5] For 15kW and above
[6] Only for 65-160/15 and 65-200
[7] Special version: see page 326 and following
[8] Cast iron EN-GJL-200-EN 1561 for 32-200/3 and models with 15, 18.5, 22 kW motor
Aluminum AL-EN-1706-AC-46000-D for all the others.

CONSTRUCTION

50Hz

Rev. V

SECTIONAL VIEW DRAWING 3LM 80-160/11

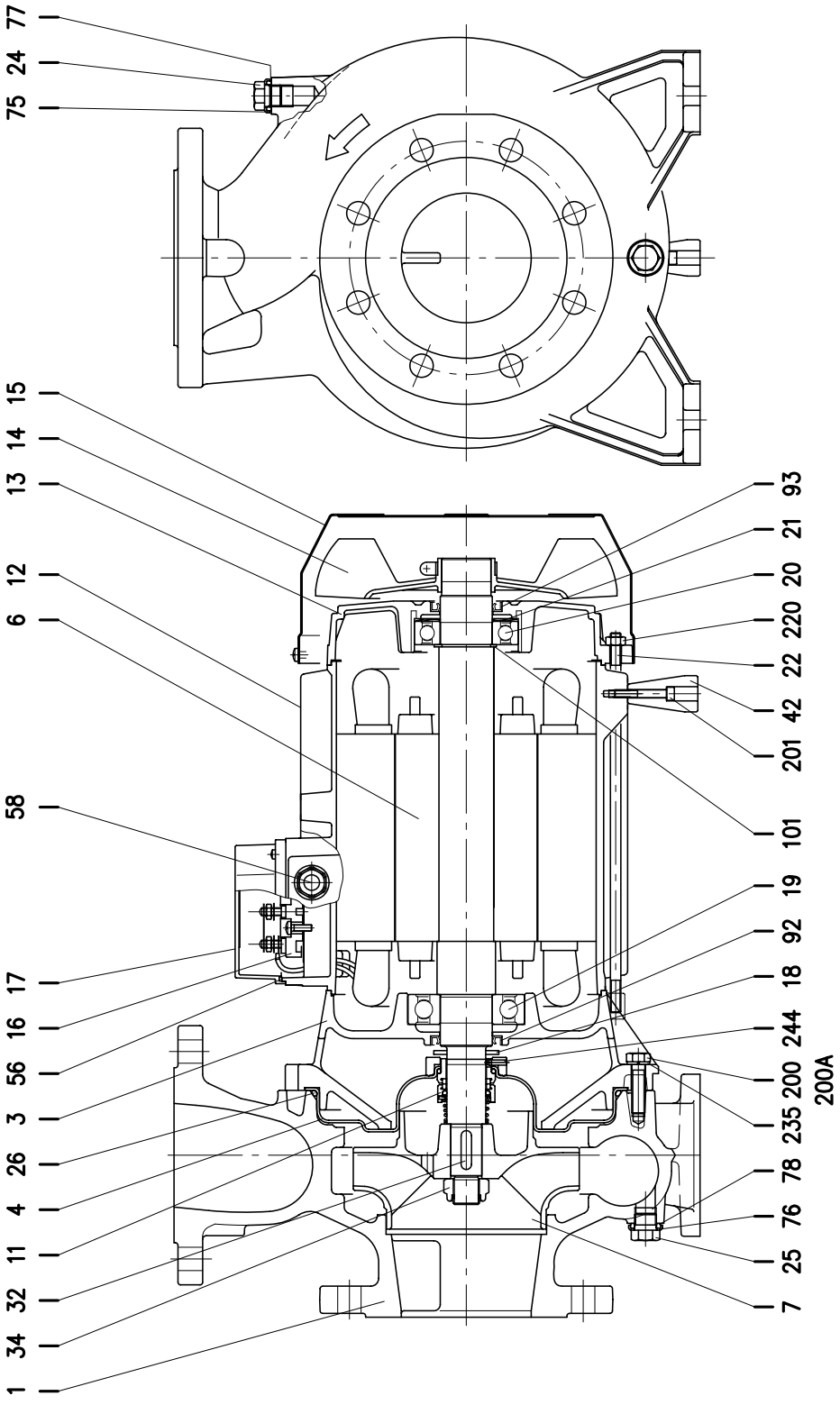

CONSTRUCTION

50Hz

Rev. V

SECTIONAL VIEW DRAWING 3LM 80-160/15R/15/18.5

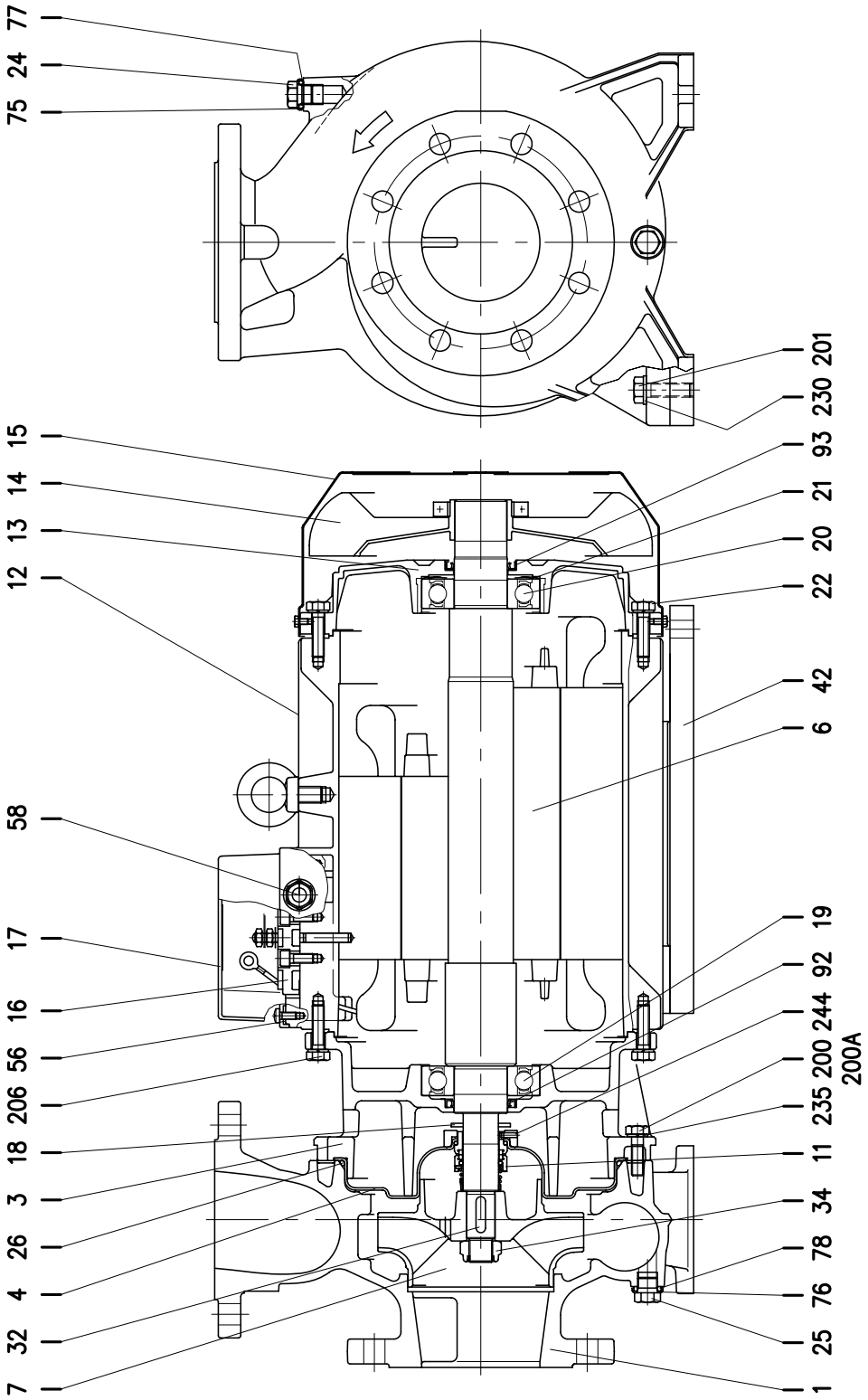

CONSTRUCTION

50Hz

Rev. V

SECTIONAL VIEW TABLE 3LM 80-160

N°	PART NAME		MATERIAL	DIMENSIONS	STANDARD	Q.TY
1	Casing		EN 1.4401 (AISI 316)			1
3	Motor bracket		Cast iron EN-GJL-200-EN 1561			1
4	Casing cover		EN 1.4404 (AISI 316L)			1
6	Shaft with rotor		EN 1.4404(AISI 316L) - Wet extension			1
7	Impeller		EN 1.4401 (AISI 316)			1
11	Mechanical seal		SiC/SiC/FPM	[5]		1
12	Motor frame with stator		-			1
13	Motor cover		Aluminium			1
14	Fan		PA			1
15	Fan cover		Fe P04 Galvanized			1
16	Terminal		-			1
17	Terminal box cover		Aluminium			1
18	Splash ring		NBR	50x29.5x3	EPE DRAWING	1
19	Bearing		-	See table p. 324		1
20	Bearing		-	See table p. 324		1
21	Adjusting ring		Steel C70			1
22	Screw		Galvanized Steel 8.8 strenght class ISO 898/1		EPE DRAWING	4
24	Plug		EN 1.4404 (AISI 316L)	G 3/8	EPE DRAWING	1
25	Plug		EN 1.4404 (AISI 316L)	G 3/8	EPE DRAWING	1
26	"O" ring		FPM	227.96x5.34	OR 6895	1
32	Key		EN 1.4404 (AISI 316L)	8x7x30	UNI 6604	1
34	Impeller nut		Aluminium	M20x1.5	UNI 7474	1
42	Foot		Aluminium		EPE DRAWING	[1]
56	Box gasket		NBR			1
58	Fasting nut		-			[2]
75	Washer (plug)		EN 1.4404 (AISI 316L)			1
76	Washer (plug)					1
77	O-ring (plug)		FPM [4]			1
78	O-ring (plug)					1
92	Lip seal	11 kW	-	40x55x7	DIN 3760	1
		15 - 18.5 kW		45x60x7	without spring	1
93	Lip seal	11 kW	-	40x55x7	DIN 3760	1
		15 - 18.5 kW		45x60x7	without spring	1
101	Snap ring (only 11 kW)		Carbon tool steels TC 80	Ø 40	UNI 7435	1
200	Screw		Stainless steel A2-70 class ISO 3506/1	M 10x35	UNI 5739	10
200 A	Screw			M 10x30		2
201	Screw	11 kW	Stainless steel A2-70 class ISO 3506/1	M 6x40	UNI 5739	1
		15 - 18.5 kW		M 12x40		4
206	Screw for bracket (only 15 - 18.5 kW)		Galvanized steel 8.8 strenght class ISO 898/1	M 10x40	UNI 5739	4
220	Nut for tie rod (only 11 kW)		Galvanized steel	M10		4
230	Washer	11 kW	-	-	-	-
		15 - 18.5 kW	Galvanized steel	13x24x2.5	UNI 6592	4
235	Washer		EN 1.4301(AISI 304)	10.5	UNI 6592	12
244	Pin [3]		EN 1.4301(AISI 304)	4x15		1

Counterflange kit on request, see p. 335-336

[1] Quantity =1 for version 80-160/11
Quantity =2 for version 80-160/15R, 80-160/15 and 80-160/18.5
[2] Quantity =1 for version 80-160/11
Quantity =2 for version 80-160/15R, 80-160/15 and 80-16018.5
[3] Not for H and E version
[4] FPM for H, HW, HSW version
EPDM for E version, Q1AEGG, Q1Q1EGG, Q1U3EGG, U3CEGG
[5] Special version: see page 326 and following

CONSTRUCTION

50Hz

Rev. V

SECTIONAL VIEW DRAWING 3(.)S 32, 40, 50

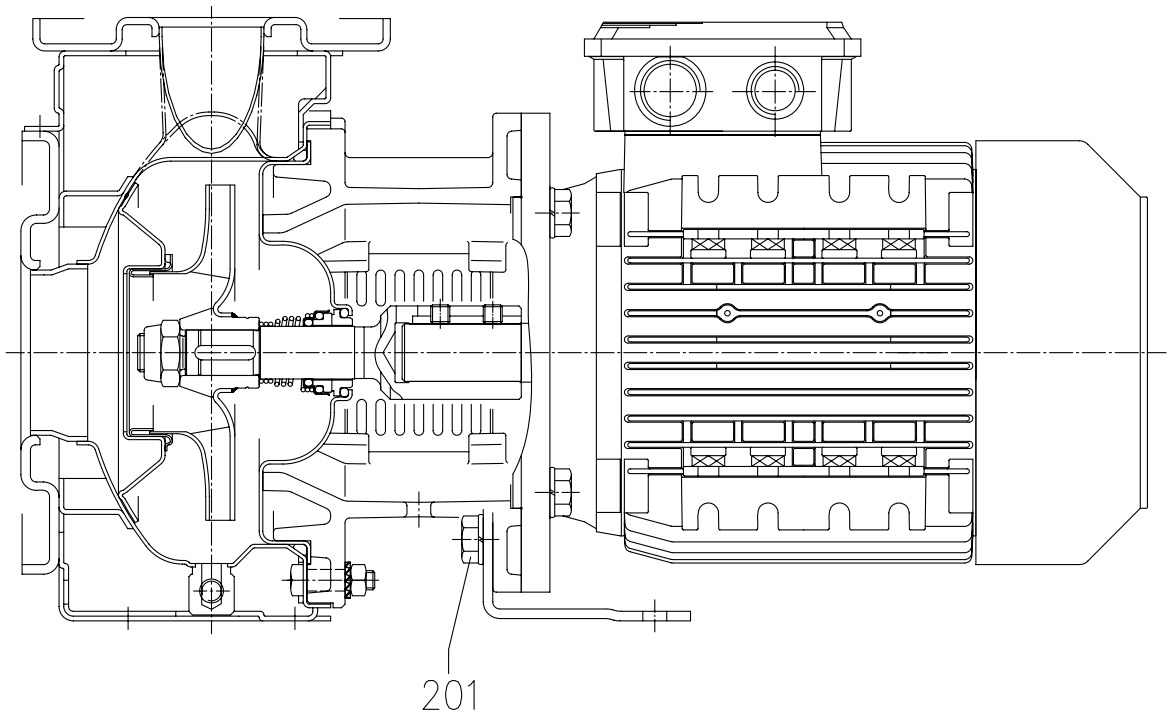

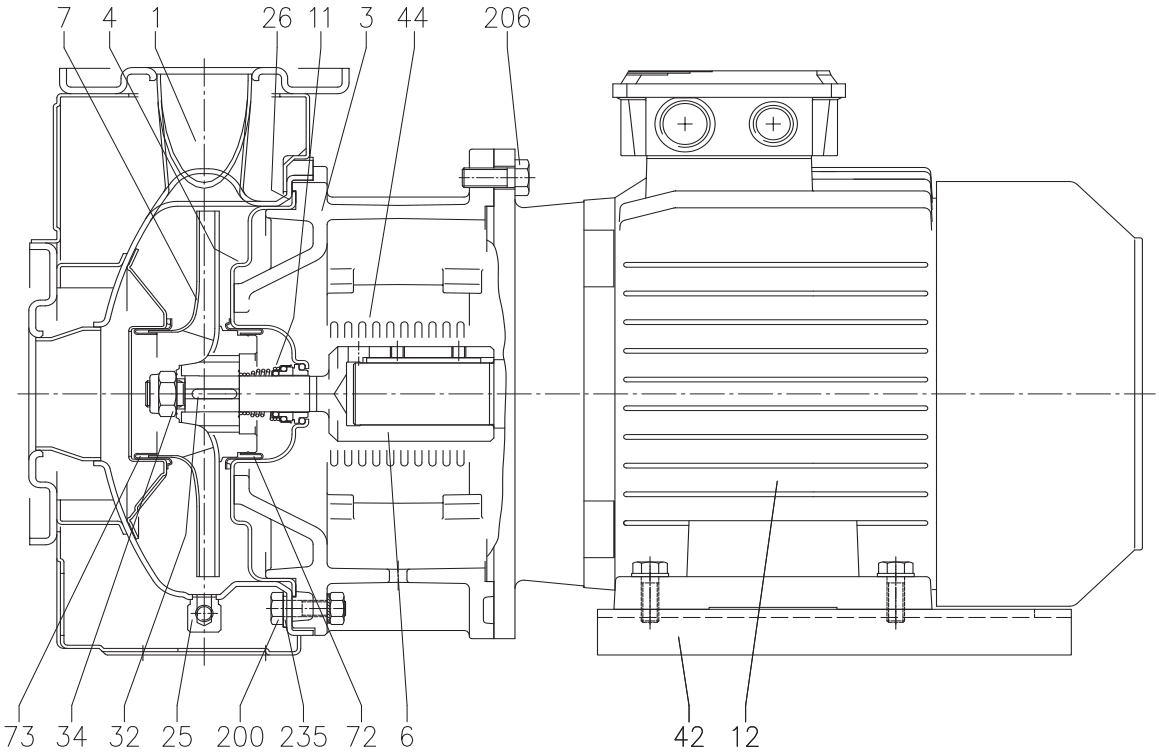

CONSTRUCTION

50Hz

Rev. V

SECTIONAL VIEW DRAWING 3(.)S 65-125/160/200

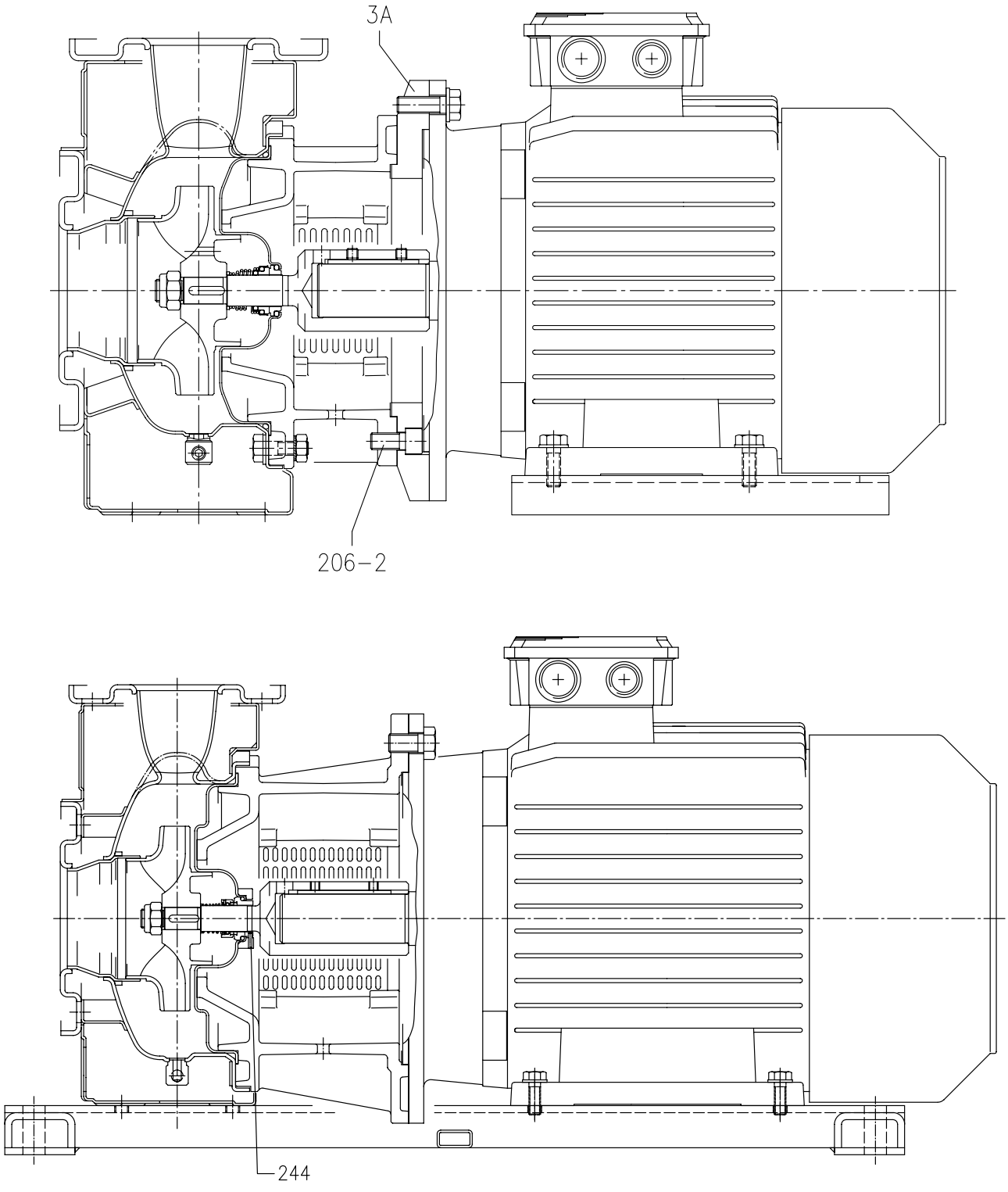

CONSTRUCTION

50Hz

Rev. V

SECTIONAL VIEW TABLE 3(.)S 32, 40, 50, 65-125/160/200

N°	PART NAME		MATERIAL 3S	MATERIAL 3LS	DIMENSIONS	STANDARD	Q.TY
1	Casing		EN 1.4301 (AISI 304)	EN 1.4404 (AISI 316L)			1
3	Motor bracket		Cast iron EN-GJL-200-EN 1561				1
3 A	Adapter ring	[1]	Cast iron EN-GJL-200-EN 1561				1
4	Casing cover		EN 1.4301 (AISI 304)	EN 1.4404 (AISI 316L)			1
6	Coupling - Part in contact with liquid		EN 1.4301 (AISI 304)	EN 1.4404 (AISI 316L)	See table p. 333		1
7	Impeller		EN 1.4301 (AISI 304)	EN 1.4404 (AISI 316L)			1
11	Mechanical seal		Carbon/Ceramic/NBR	SiC/SiC/FPM	[7]		1
12	Motor		-				1
25	Draing plug		EN 1.4401 (AISI 316) / PTFE		R 1/8" L=8	DIN 906	1
26	"O" ring	32-125, 40-125	NBR [8]	FPM	158.11x5.34	OR 6625	1
		32-160, 40-160, 50-125, 65-125			183.52x5.34	OR 6720	
		32-200, 40-200,50-160, 50-200, 65-160, 65-200			227.96x5.34	OR 6895	
32	Key	Up to 11 kW	EN 1.4401 (AISI 316)		6x6x25	UNI 6604	1
		15 kW and above			8x7x30		
34	Impeller nut	Up to 11kW	EN 1.4301 (AISI 304)	EN 1.4404 (AISI 316L)	M16x1.5	UNI 7474	1
		50-200/15			M18x1.5		
		15 kW and above			M20x1.5		
42	Foot		Aluminium / Galvanized steel				[2]
44	Protection		EN 1.4301 (AISI 304)			EBARA DRAWING	1
72	Casing ring	[3]	EN 1.4301 (AISI 304)	EN 1.4404 (AISI 316L)			1
73	Casing ring (not for 65 version)		EN 1.4301 (AISI 304)	EN 1.4404 (AISI 316L)			1
200	Screw	32-125, 40-125	Stainless steel A2 70 class ISO 3506/1		M 8x30	UNI 5739	8
		50-200, 65-125, 65-160, 65-200			M 10x35	UNI 5739	[4]
201	Screw		Galvanized Steel 8.8 strenght class ISO 898/1		M 10x16	UNI 5739	[5]
206	Screw for bracket		Galvanized Steel 8.8 strenght class ISO 898/1		M 10x40	UNI 5739	4
206-2	Screw adapter ring	[1]	Galvanized Steel 8.8 strenght class ISO 898/1			UNI 5931	4
235	Washer	32-125, 40-125	Stainless steel A2 70 class ISO 3506/1		M 8.4x17	UNI 6592	8
		50-200, 65-125, 65-160, 65-200			M 10.5x21	UNI 6592	[4]
244	Pin	[6]	-	EN 1.4301 (AISI 304)		UNI 5931	4

Counterflange kit on request see p. 335-336

[1] Only for version 65-125/5.5 and 65-125/7.5
[2] Quantity =0 for version 65-200/22
Quantity =1 for version for 32, 40, 50, 65-125/5.5, 65-125/7.5, 65-160/11, 65-160/15, 65-200/15, 65-200/18.5
Quantity =2 for version for 65-125/4, 65-160/7.5, 65-160/9.2
[3] Only for version 32-200, 40-200, 50-160, 50-200
[4] Quantity =10 for 32-160, 40-160, 50-125, 65-125
Quantity =12 for 32-200, 40-200, 50-160, 50-200, 65-160, 65-200
[5] Only for version 32-125/1.1, 32-160/1.5, 32-160/1.5, 32-160/2.2, 40-125/1.5, 40-125/2.2, 50-125/2.2
[6] Only for 65-160/15, 65-200
[7] Special version: see page 326 and following
[8] FPM for H-HS-HW-HSW version
EPDM for E version, Q1AEGG, U3U3EGG , Q1Q1EGG, Q1U3EGG, U3CEGG)
U3U3EGG not available for 65-150/15 and 65-200

CONSTRUCTION

50Hz

Rev. V

SECTIONAL VIEW DRAWING 3LSZ 32, 40-125/160, 40-200/5.5/7.5
50-125/160, 50-200/9.2, 65-125, 65-160/7.5/9.2

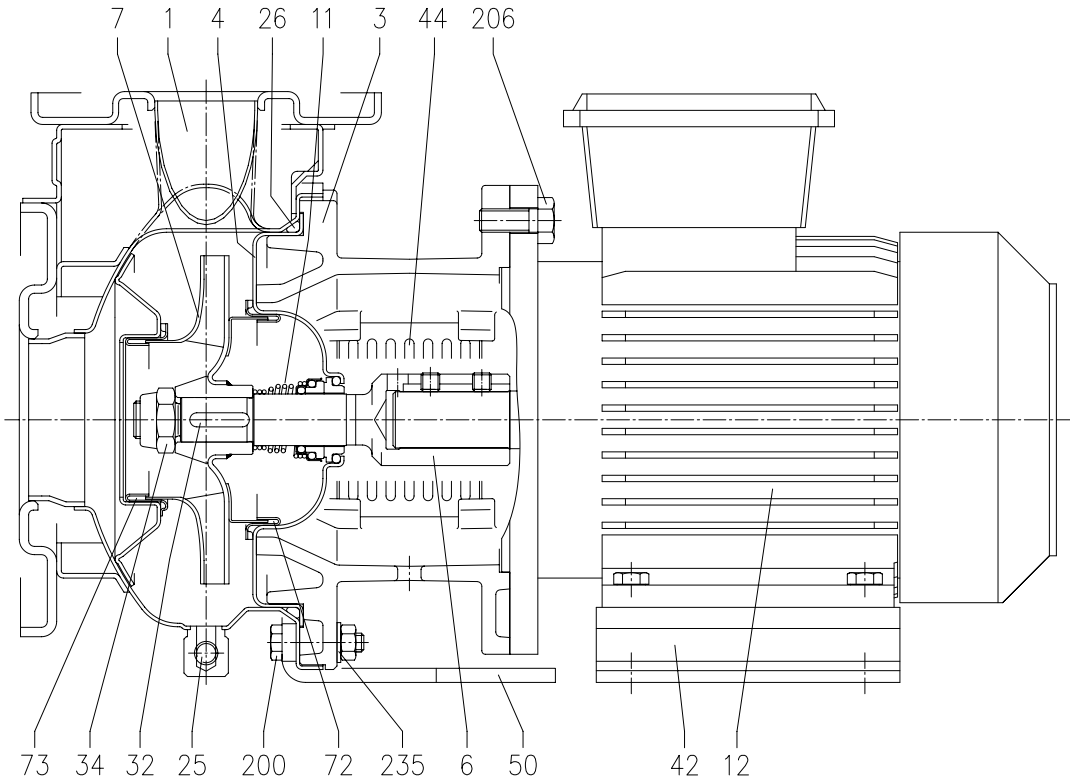

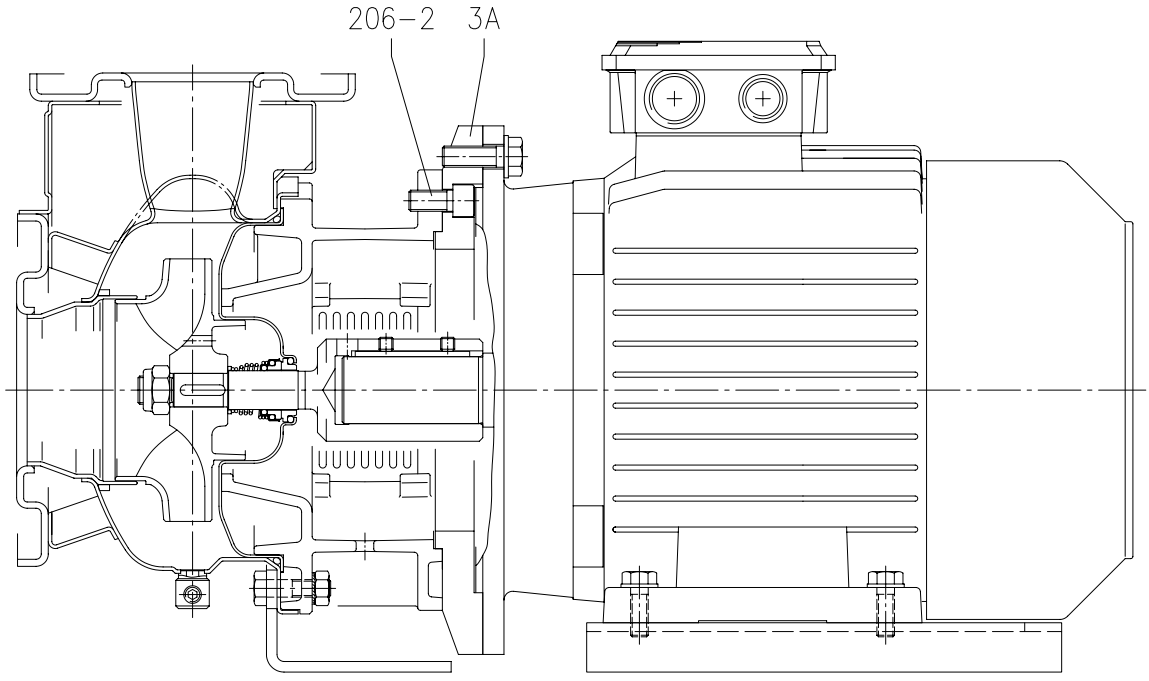

CONSTRUCTION

50Hz

Rev. V

SECTIONAL VIEW DRAWING 3LSZ 40-200/11, 50-200/11/15, 65-160/11/15, 62-200

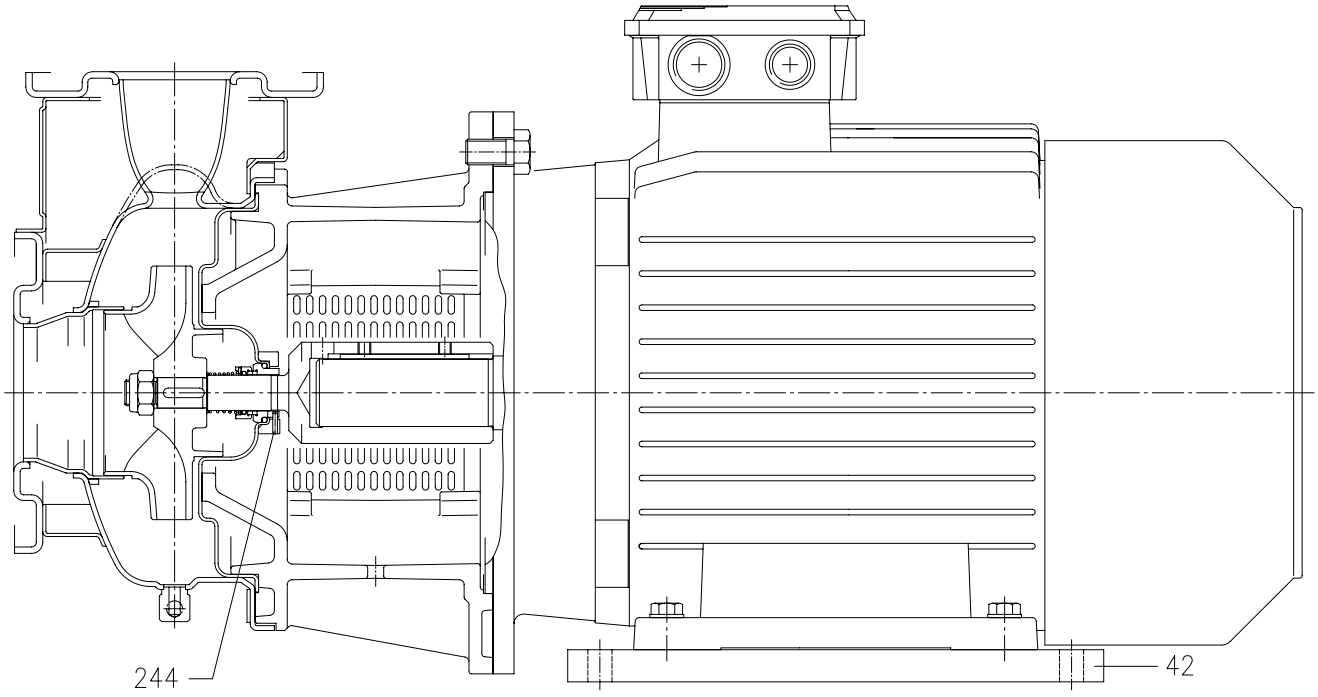

CONSTRUCTION

50Hz

Rev. V

SECTIONAL VIEW TABLE 3LSZ 32, 40, 50, 65-125/160/200

N°	PART NAME		MATERIAL	DIMENSIONS	STANDARD	Q.TY
1	Casing		EN 1.4404 (AISI 316L)			1
3	Motor bracket		Cast iron EN-GJL-200-EN 1561			1
3 A	Adapter ring [1]		Cast iron EN-GJL-200-EN 1561			1
4	Casing cover		EN 1.4404 (AISI 316L)			1
6	Coupling - Part in contact with liquid		EN 1.4404 (AISI 316L)	See table p. 333		1
7	Impeller		EN 1.4404 (AISI 316L)			1
11	Mechanical seal		SiC/SiC/FPM	[7]		1
12	Motor		-			1
25	Draing plug		EN 1.4401 (AISI 316) / PTFE	R 1/8" L=8	DIN 906	1
26	"O" ring	32-125, 40-125	FPM	158.11x5.34	OR 6625	1
		32-160, 40-160, 50-125, 65-125		183.52x5.34	OR 6720	
		32-200, 40-200,50-160, 50-200, 65-160, 65-200		227.96x5.34	OR 6895	
32	Key	Up to 11 kW	EN 1.4401 (AISI 316)	6x6x25	UNI 6604	1
		15 kW and above		8x7x30		
34	Impeller nut	Up to 11kW	EN 1.4404 (AISI 316L)	M16x1.5	UNI 7474	1
		50-200/15		M18x1.5		
		15 kW and above		M20x1.5		
42	Foot		Aluminium / Galvanized steel			[2]
44	Protection		EN 1.4301 (AISI 304)		EBARA DRAWING	1
50	Casing foot (only from 1.1 kW to 9.2 kW)		Galvanized Steel			1
72	Casing ring [3]		EN 1.4404 (AISI 316L)			1
73	Casing ring		EN 1.4404 (AISI 316L)			1
200	Screw	32-125, 40-125	Stainless steel A2 70 class ISO 3506/1	M 8x30	UNI 5739	8
		50-200, 65-125, 65-160, 65-200		M 10x35	UNI 5739	[4]
201	Screw		Galvanized Steel 8.8	M 10x16	UNI 5739	[5]
206	Screw for bracket		Galvanized Steel 8.8	M 10x40	UNI 5739	4
206-2	Screw adapter ring [1]		Galvanized Steel 8.8		UNI 5931	4
235	Washer	32-125, 40-125	Stainless steel A2 70 class ISO 3506/1	M 8.4x17	UNI 6592	8
		50-200, 65-125, 65-160, 65-200		M 10.5x21	UNI 6592	[4]
244	Pin [6]		EN 1.4301 (AISI 304)		UNI 5931	4

Counterflange kit on request see p. 335-336

[1] Only for version 65-125/5.5/7.5
[2] Quantity =0 for version 65-200/22
Quantity =1 for version for 32-125/160, 50-125/2.2
Quantity =2 for version for 32-200, 40-125/160/200, 50-125/3/4, 50-160/200, 65-125, 65-160, 65-200/15/18.5
[3] Only for version 32-200, 40-200, 50-160, 50-200
[4] Quantity =10 for 32-160, 40-160, 50-125, 65-125
Quantity =12 for 32-200, 40-200, 50-160, 50-200, 65-160, 65-200
[5] Only for version 32-125/1.1, 32-160/1.5, 32-160/1.5, 32-160/2.2, 40-125/1.5, 40-125/2.2, 50-125/2.2
[6] Only for 65-160/15, 65-200
[7] Special version: see page 326 and following
[8] FPM for H-HS-HW-HSW version
EPDM for E version, U3U3EGG, Q1Q1EGG, Q1U3EGG, Q1AEGG, U3CEGG
U3U3EGG not available for 65-150/15 and 65-200

CONSTRUCTION

50Hz

Rev. V

SECTIONAL VIEW DRAWING 3LS 80-160

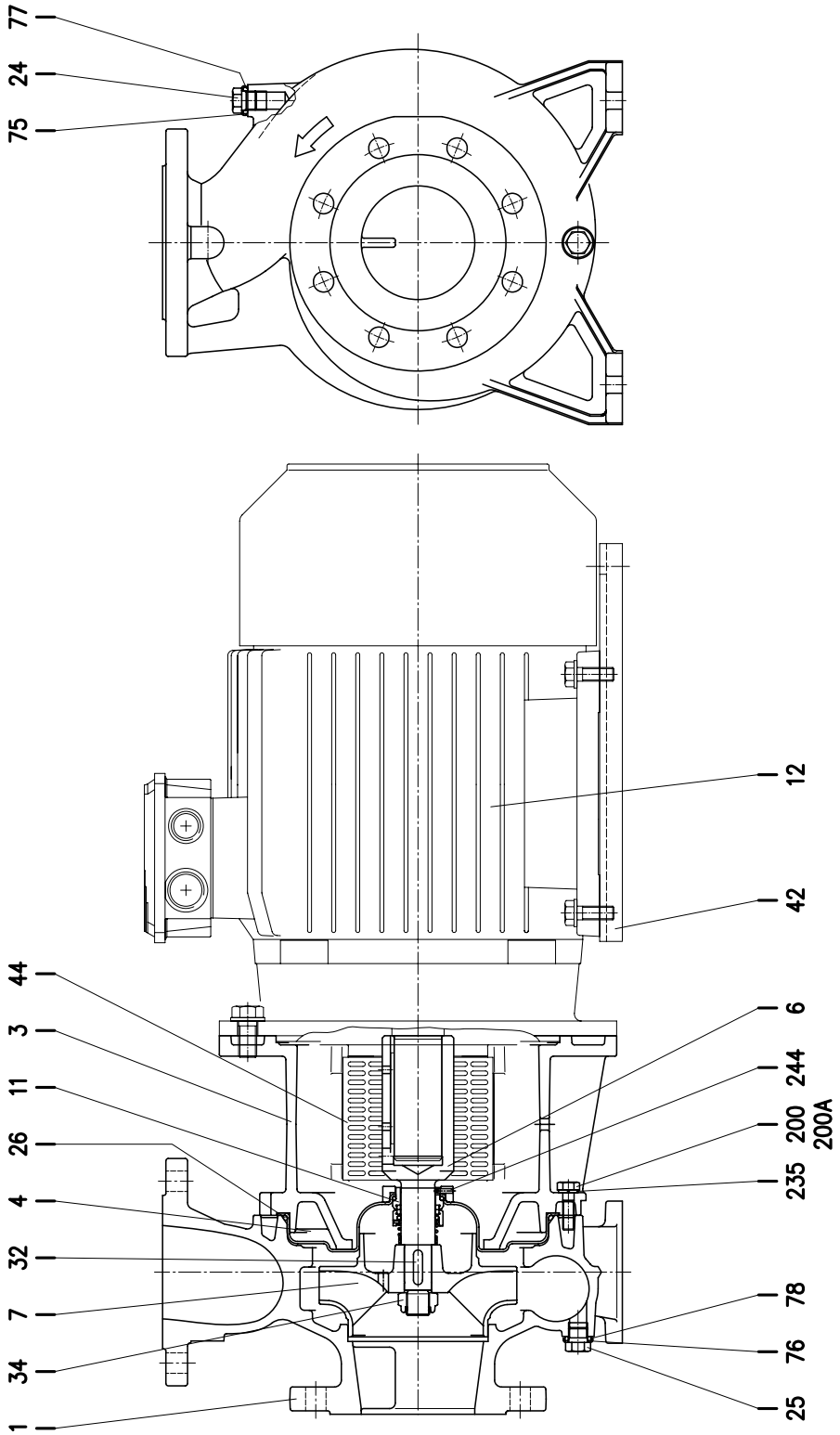

CONSTRUCTION

50Hz

Rev. V

SECTIONAL VIEW TABLE 3LS 80-160

N°	PART NAME	MATERIAL	DIMENSIONS	STANDARD
1	Casing	EN 1.4401 (AISI 316)		
3	Motor bracket	Cast iron EN-GJL-200-EN 1561		
4	Casing cover	EN 1.4404 (AISI 316L)		
6	Coupling	EN 1.4404 (AISI 316L)	See table p. 333	
7	Impeller	EN 1.4401 (AISI 316)		
11	Mechanical seal	SiC/SiC/FPM	[3]	
12	Motor	-		
24	Plug	EN 1.4404 (AISI 316L)	G3/8	EPE DRAWING
25	Plug	EN 1.4404 (AISI 316L)	G3/8	EPE DRAWING
26	"O" ring	FPM [2]	227.96x5.34	OR 6895
32	Key	EN 1.4401 (AISI 316)	8x7x30	UNI 6604
34	Impeller nut	EN 1.4404 (AISI 316L)	M 20x1.5	UNI 7474
42	Foot	Aluminium		EPE DRAWING
44	Protection	EN 1.4301 (AISI 304)		EPE DRAWING
75	Washer (plug)	EN 1.4404 (AISI 316L)		
76	Washer (plug)			
77	O-ring (plug)	FPM [2]		
78	O-ring (plug)			
200	Screw	Stainless steel A2-70	M 10x35	UNI 5739
200 A	Screw	class ISO 3506/1	M 10x30	
235	Washer	EN 1.4301(AISI 304)	10.5x21	UNI 6592
244	Pin [1]	EN 1.4301(AISI 304)	4x15	

Counterflange kit on request see p. 335-336

[1] Not for H and E version.
[2] FPM for H, HW, HSW version
EPDM for E version and Special Seals (Q1AEGG, Q1Q1EGG, U3CEGG, Q1U3EGG)

[3] Special version: see page 326 and following

CONSTRUCTION

50Hz

Rev. V

SECTIONAL VIEW DRAWING 3LS 65-250, 80-200/250

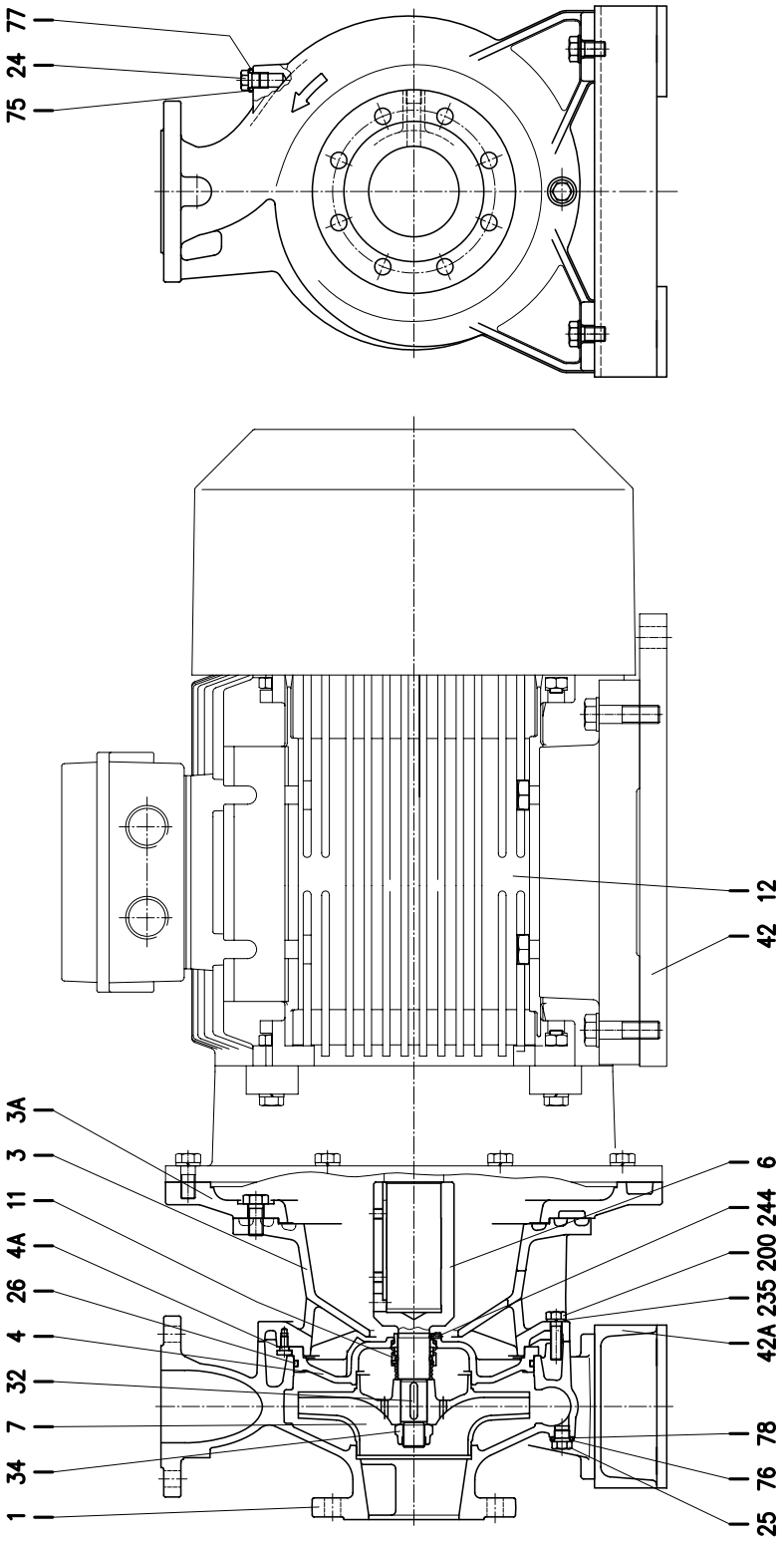

CONSTRUCTION

50Hz

Rev. V

SECTIONAL VIEW TABLE 3LS 65-250, 80-200/250

N°	PART NAME			MATERIAL	DIMENSIONS	STANDARD	Q.TY
1	Casing			EN 1.4401 (AISI 316)			1
3	Motor bracket			Cast iron EN-GJL-200-EN 1561			1
3 A	Adapter ring			Cast iron EN-GJL-200-EN 1561			[1]
4	Casing cover			EN 1.4401 (AISI 316)			1
4 A	Screw for casing cover			EN 1.4301(AISI 304)			2
6	Coupling	65-250	d=24 mm	EN 1.4404 (AISI 316L) for 22 kW	See table p. 333		1
				EN 1.4462 (Duplex stainless steel) for 30-37 kW			1
		80-200	d=24 mm	EN 1.4404 (AISI 316L) for 22 kW			1
				EN 1.4462 (Duplex stainless steel) for 30-37 kW			1
		80-250	d=29 mm	EN 1.4462 (Duplex stainless steel)			1
7	Impeller			EN 1.4401 (AISI 316)			1
11	Mechanical seal			SiC/SiC/FPM	[6]		1
12	Motor			-			1
24	Plug			EN 1.4404 (AISI 316L)	G3/8	EPE DRAWING	1
25	Plug			EN 1.4404 (AISI 316L)	G3/8	EPE DRAWING	1
26	"O" ring			FPM [5]	253.36x5.34	OR 6995	1
32	Key	65-250	d=24 mm	EN 1.4401 (AISI 316)	8x7x30	UNI 6604	1
		80-200					1
		80-250	d=29 mm		8x7x40		1
34	impeller nut	65-250	d=24 mm	EN 1.4404 (AISI 316L)	M20x1.5	UNI 7474	1
		80-200					1
		85-250	d=29 mm		M24x2		1
42	Foot for motor			Aluminium		EPE DRAWING	[2]
42 A	Foot for pump			Aluminium/Galvanized steel (only for 80-250/55)			[3]
75	Washer (plug)			EN 1.4404 (AISI 316L)			1
76	Washer (plug)						1
77	O-ring (plug)			FPM [5]			1
78	O-ring (plug)						1
200	Screw			Stainless steel A2-70 class ISO 3506/1	M 12x45	UNI 5739	10
235	Washer			C70	13	UNI 1751	10
244	Pin [4]			EN 1.4301(AISI 304)	4x12		1

Counterflange kit on request, see table p. 335-336

[1] Only for 65-250/37 , 80-200/37 , 80-250/37 – 80-250/45 and 80-250/55
[2] Quantity =2 for 80-250/55
[3] Quantity =2 for 80-200/30 , 80-200/37 , 80-250/45
Quantity =1 for 80-250/55
[4] Not for H and E version
[5] FPM for H, HW, HSW version
EPDM for E version and Special seals Q1Q1EGG, Q1U3EGG, U3CEGG, Q1AEGG (Not for model 80-250)
EPDM for ES version only model 80-250
[6] Special version: see page 326 and following

CONSTRUCTION

50Hz

Rev. V

SECTIONAL VIEW DRAWING 3(.)P 32, 40, 50, 65-125/160/200

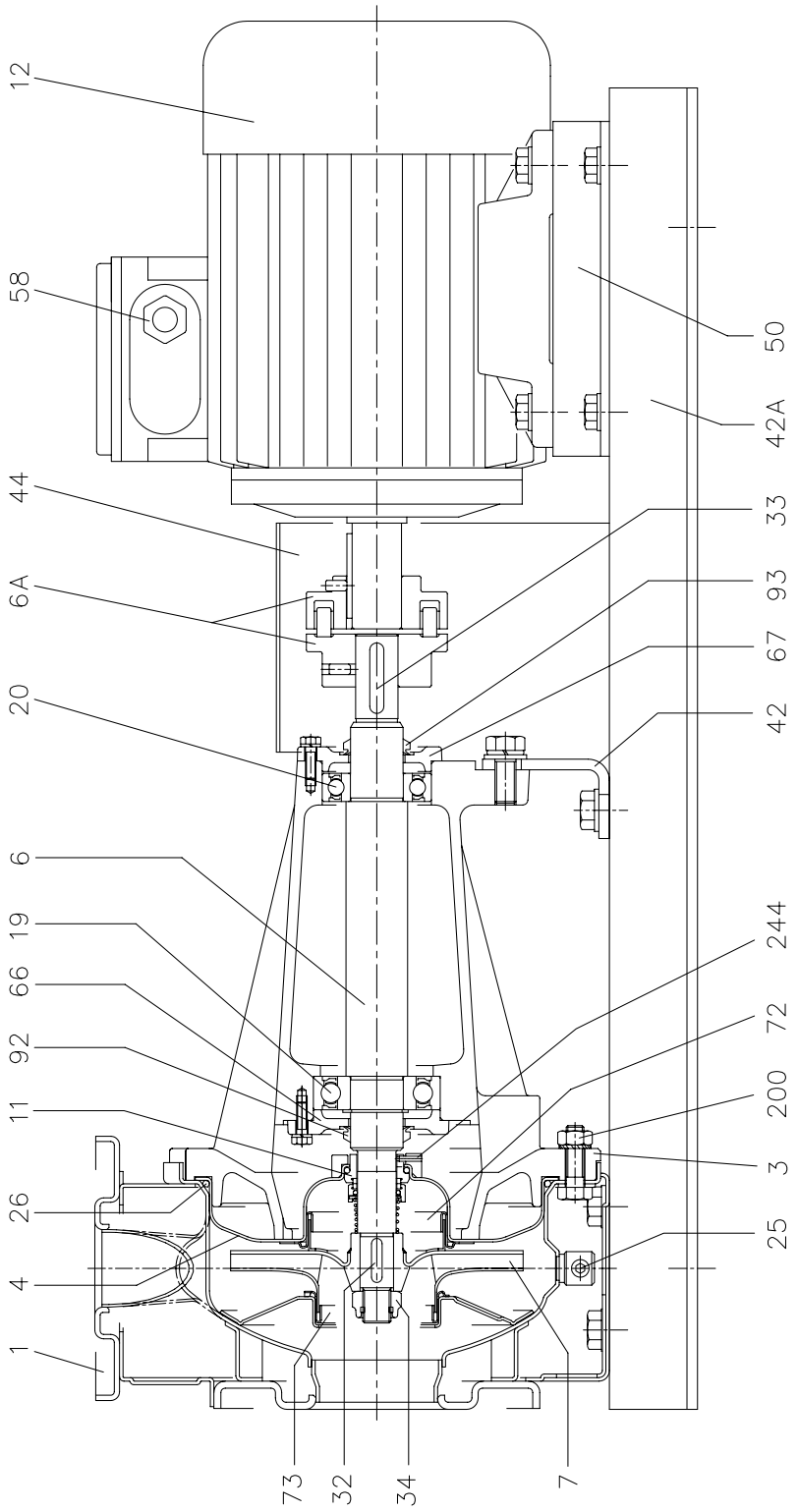

CONSTRUCTION 50Hz

Rev. V

SECTIONAL VIEW TABLE 3(.)P 32, 40, 50, 65-125/160/200

N°	PART NAME		MATERIAL 3P	MATERIAL 3LP	DIMENSIONS	STANDARD
1	Casing		EN 1.4301 (AISI 304)	EN 1.4404 (AISI 316L)		
3	Support		Cast iron EN-GJL-200-EN 1561			
4	Casing cover		EN 1.4301 (AISI 304)	EN 1.4404 (AISI 316L)		
6	Shaft - Part in contact with liquid		EN 1.4301 (AISI 304)	EN 1.4404 (AISI 316L)		
6 A	Flexible coupling		Cast iron EN-GJL-250-EN 1561		See table pag. 334	
7	Impeller		EN 1.4301 (AISI 304)	EN 1.4404 (AISI 316L)		
11	Mechanical seal		Carbon/Ceramic/NBR	SiC/SiC/FPM	[5]	
12	Motor		-			
19	Bearing		-		See table p. 325	
20	Bearing		-		See table p. 325	
25	Draing plug		EN 1.4401 (AISI 316) / PTFE		R 1/8" L=8	DIN 906
26	"O" ring	32-125, 40-125	NBR [4]	FPM	158.11x5.34	OR 6625
		32-160, 40-160, 50-125, 65-125			183.52x5.34	OR 6720
		32-200, 40-200, 50-160, 50-200, 65-160, 65-200			227.96x5.34	OR 6895
32	Key	Up to 11 kW	EN 1.4401 (AISI 316)		6x6x25	UNI 6604
		15 kW and above			8x7x30	
33	Key		C 40		8x7x40	UNI 6604
34	Impeller nut	Up to 11kW	EN 1.4301 (AISI 304)	EN 1.4404 (AISI 316L)	M16x1.5	UNI 7474
		50-200/15			M18x1.5	
		15 kW and above			M20x1.5	
42	Pump support		Fe 37 Galvanized			EBARA DRAWING
42 A	Base		Fe 37 Galvanized			
44	Protection		Fe 37 Galvanized			
50	Foot		Aluminium / Galvanized steel			
58	Fasting nut		-			
66	Impeller side bearing cover		Cast iron EN-GJL-200-EN 1561			
67	Motor side bearing cover		Cast iron EN-GJL-200-EN 1561			
72	Casing ring	[1]	EN 1.4301 (AISI 304)	EN 1.4404 (AISI 316L)		
73	Casing ring (not for 65 version)		EN 1.4301 (AISI 304)	EN 1.4404 (AISI 316L)		
92	"V" ring		-		VS - 0030	
93	"V" ring		-		VS - 0030	
200	Screw	32-125, 40-125	Stainless steel A2 70 class ISO 3506/1		M 8x30	UNI 5739
		40-160, 40-200, 50-125, 50-160, 50-200, 65-125, 65-160, 65-200			M 10x35	UNI 5739
244	Pin	[3]	/	EN 1.4301 (AISI 304)	4x15	

Counterflange kit on request see p. 335-336

[1] For version: 32-200/3, 32-200/4, 32-200/5.5, 40-200/5.5, 40-200/5.5, 40-200/7.5, 40-200/11, 50-160/5.5, 50-1607.5, 50-200/9.2, 50-200/11, 50-200/15
[2] Quantity =10 for 32-160, 40-160, 50-125, 65-125
Quantity =12 for 32-200, 40-200, 50-160, 50-200, 65-160, 65-200
[3] Only for 65-160/15 and 65-200
[4] FPM for H-HS-HW-HSW version
EPDM for E version and Special Seals Q1Q1EGG, Q1U3EGG, U3CEGG, Q1AEGG, U3U3EGG
. U3U3EGG is not available for model 65-160/15 and model 65-200
[5] Special version: see page 326 and following

CONSTRUCTION

50Hz

Rev. V

SECTIONAL VIEW DRAWING 3LP 80-160

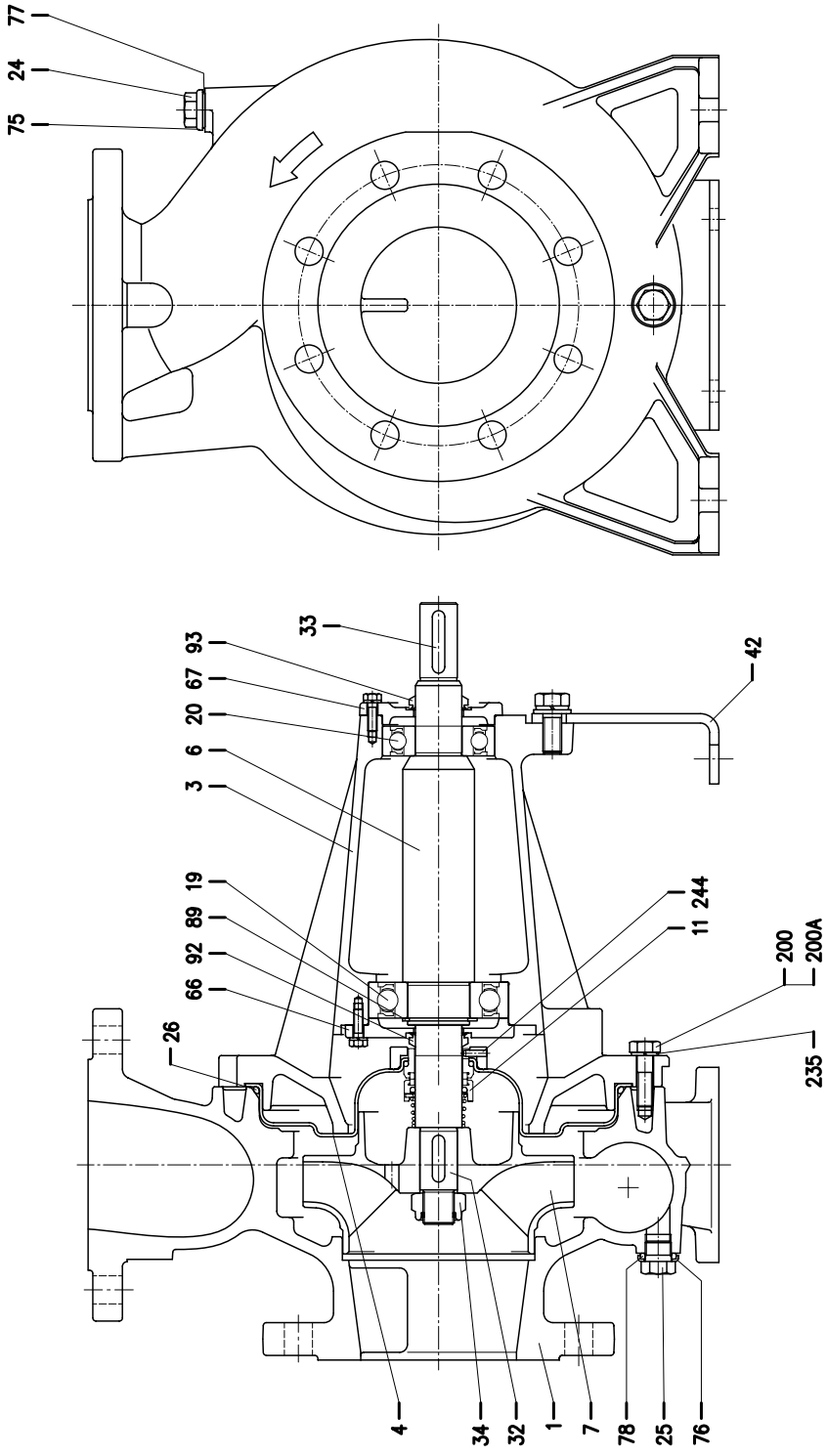

CONSTRUCTION

50Hz

Rev. V

SECTIONAL VIEW DRAWING 3LP 65-250, 80-200/250

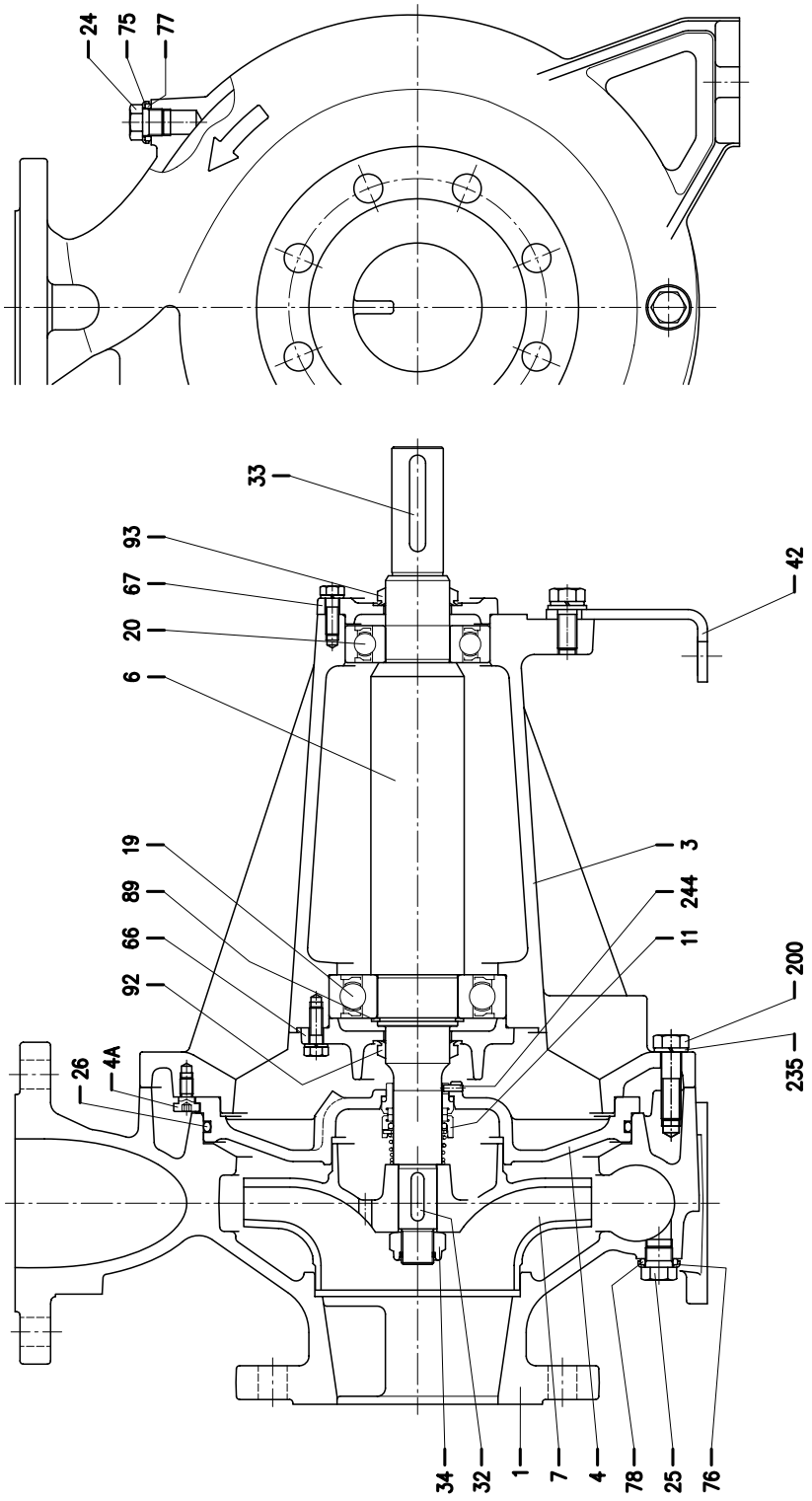

CONSTRUCTION

50Hz

Rev. V

SECTIONAL VIEW DRAWING 3LP 65-250, 80-160/200/250

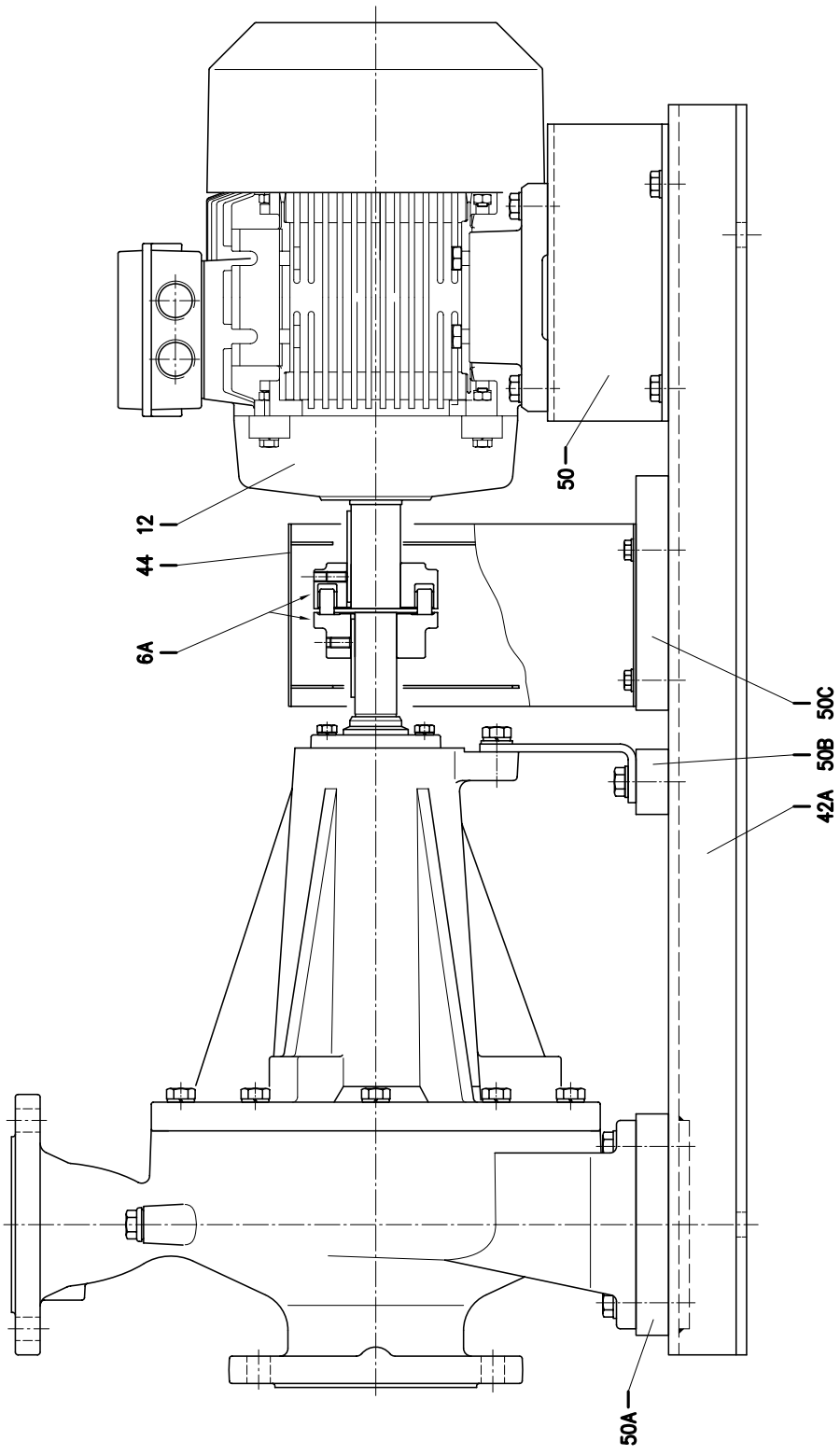

CONSTRUCTION

50Hz

Rev. V

SECTIONAL VIEW TABLE 3LP 80-160

N°	PART NAME	MATERIAL	DIMENSIONS	STANDARD	Q.TY
1	Casing	EN 1.4401 (AISI 316)			1
3	Support	Cast iron EN-GJL-200-EN 1561			1
4	Casing cover	EN 1.4404 (AISI 316L)			1
6	Shaft	EN 1.4404 (AISI 316L) - Wet extension			1
6 A	Flexible coupling	Cast iron EN-GJL-250-EN 1561	See table p. 334		1
7	Impeller	EN 1.4401 (AISI 316)			1
11	Mechanical seal	SiC/SiC/FPM	[3]		1
12	Motor	-			1
19	Bearing	-	See table p. 325		1
20	Bearing	-	See table p. 325		1
24	Plug	EN 1.4404 (AISI 316L)	G3/8	EPE DRAWING	1
25	Plug	EN 1.4404 (AISI 316L)	G3/8	EPE DRAWING	1
26	"O" ring	FPM [2]	227.96x5.34	OR 6895	1
32	Key	EN 1.4401 (AISI 316)	8x7x30	UNI 6604	1
33	Key	C 40	8x7x40		1
34	Impeller nut	EN 1.4404 (AISI 316L)	M20x1.5	UNI 7474	1
42	Pump support	Galvanized steel		EPE DRAWING	1
42 A	Base	Galvanized steel		EPE DRAWING	1
44	Protection	Galvanized steel		EPE DRAWING	1
50	Foot	Aluminium		EPE DRAWING	2
50 A	Spacer for pump	/			/
50 B	Spacer for pump	/			/
50 C	spacer for protection	/			/
66	Impeller side bearing cover	Cast iron EN-GJL-200-EN 1561			1
67	Motor side bearing cover	Cast iron EN-GJL-200-EN 1561			1
75	Washer (plug)	EN 1.4404 (AISI 316L)			1
76	Washer (plug)				1
77	O-ring (plug)	FPM [2]			1
78	O-ring (plug)				1
89	Snap ring	Carbon tool steels TC 80	Ø 40	UNI 7435	1
92	"V" ring	-	VS-0030		1
93	"V" ring				1
200	Screw	Stainless steel A2 70 class ISO 3506/1	M 10x35	UNI 5739	10
200 A	Screw		M 10x30		2
235	Washer	EN 1.4301(AISI 304)	10.5	UNI 8842	12
244	Pin [1]	EN 1.4301(AISI 304)	4x15	UNI 6873	1

Counterflange kit on request, see table p. 335-336

[1] Not for H and E option.
[2] FPM for H, HW, HSW version
EPDM for E version, Q1AEGG, Q1Q1EGG, Q1U3EGG, U3CEGG.
[3] Special version: see page 326 and following

For drawing see p.319

CONSTRUCTION 50Hz

Rev. V

SECTIONAL VIEW TABLE 3LP 65-250, 80-200/250

N°	PART NAME			MATERIAL	DIMENSIONS	STANDARD	Q.TY
1	Casing			EN 1.4401 (AISI 316)			1
3	Support			Cast iron EN-GJL-200-EN 1561			1
4	Casing cover			EN 1.4401 (AISI 316)			1
4 A	Screw for casing cover			EN 1.4301 (AISI 304)			2
6	Shaft			EN 1.4462 (Duplex stainless steel) - Wet extension			1
6 A	Flexible coupling			Cast iron EN-GJL-250-EN 1561	See table p. 334		1
7	Impeller			EN 1.4401 (AISI316)			1
11	Mechanical seal			SiC/SiC/FPM	[5]		1
12	Motor			-			1
19	Bearing			-	See table p. 325		1
20	Bearing			-	See table p. 325		1
24	Plug			EN 1.4404 (AISI 316L)	G3/8		1
25	Plug			EN 1.4404 (AISI 316L)	G3/8		1
26	"O" ring			FPM [4]	253.36x5.34	OR 6995	1
32	Key	65-250	d=24 mm	EN 1.4401 (AISI 316)	8x7x30	UNI 6604	1
		80-200					1
		80-250	d=29 mm		8x7x40		1
33	Key			C 40	10x8x60	UNI 6604	1
34	impeller nut	65-250	d=24 mm	EN 1.4404 (AISI 316L)	M20x1.5	UNI 7474	1
		80-200					1
		80-250	d=29 mm		M24x2		1
42	Pump support			Galvanized steel			1
42 A	Base			Galvanized steel			1
44	Protection			Galvanized steel			1
50	Foot (only for 65-250/22kW)			Aluminium			2
50 A	Spacer			Aluminium			[1]
50 B	Spacer			Aluminium			[2]
50 C	Spacer for protection			Aluminium			[3]
66	Impeller side bearing cover			Cast iron EN-GJL-200-EN 1561			1
67	Motor side bearing cover			Cast iron EN-GJL-200-EN 1561			1
75	Washer (plug)			EN 1.4404 (AISI 316L)			1
76	Washer (plug)						1
77	O-ring (plug)			FPM [4]			1
78	O-ring (plug)						1
89	Snap ring			Carbon tool steels TC 80	Ø 50	UNI 7435	1
92	"V" ring			-	VS-0040		1
93	"V" ring						1
200	Screw			Stainless steel A2 70 class ISO 3506/1	M 12x45	UNI 5739	10
235	Washer			EN 1.4301 (AISI 304)	13	UNI 8842	10
244	Pin [3]			EN 1.4301 (AISI 304)	4x12	UNI 6873	1

Counterflange kit on request, see table p. 335-336

[1] Quantity =0 for 65-250, 80-200/22 and 80-250/55
Quantity =2 for 80-200/30, 80-200/37 and 80-250/45
[2] Quantity =0 for 65-250, 80-200/22 and 80-250/55
Quantity =2 for 80-200/30, 80-200/37 and 80-250/45
[3] Not for H and E option.
[4] FPM for H, HW, HSW version
EPDM for E version and for Q1Q1EGG, Q1U3EGG, U3CEGG, Q1AEGG
EPDM for ES version only model 80-250
[5] Special version: see page 326 and following

For drawing see p.320-321

CONSTRUCTION

50Hz

Rev. V

BEARINGS 3(.)M

Pump type		Ball bearing			
Single Phase 50 Hz	Three Phase 50 Hz	Pump side	(*) Pump side	Fan side	(*) Fan side
3(.)M 32-125/1.1 M	3(.)M(Z) 32-125/1.1	6205-2RSH	6205-ZZ C3	6205-2RSH	6203-ZZ C3
3(.)M 32-160/1.5 M	3(.)M(Z) 32-160/1.5				
3(.)M 32-160/2.2 M	3(.)M(Z) 32-160/2.2				
-	3(.)M(Z) 32-200/3				6205-ZZ C3
	3(.)M(Z) 32-200/4	6206-2RS1	6206-ZZ C3		
	3(.)M(Z) 32-200/5.5	6306-2RS1	6306-ZZ C3	6206-2RS1	6206-ZZ C3
	3(.)M(Z) 32-200/7.5				
3(.)M 40-125/1.5 M	3(.)M(Z) 40-125/1.5	6205-2RSH	6205-ZZ C3	6205-2RSH	6205-ZZ C3
3(.)M 40-125/2.2 M	3(.)M(Z) 40-125/2.2				
-	3(.)M(Z) 40-160/3				
	3(.)M(Z) 40-160/4	6206-2RS1	6206-ZZ C3		
	3(.)M(Z) 40-200/5.5	6306 2RS1	6306 ZZ C3	6206-2RS1	6206-ZZ C3
	3(.)M(Z) 40-200/7.5				
	3(.)M(Z) 40-200/11	6308-2RS1	6308-ZZ C3	6208-2RS1	6208-ZZ C3
3(.)M 50-125/2.2 M	3(.)M(Z) 50-125/2.2	6205-2RSH	6205-ZZ C3	6205-2RSH	6205-ZZ C3
-	3(.)M(Z) 50-125/3				
	3(.)M(Z) 50-125/4	6206-2RS1	6206-ZZ C3		
	3(.)M(Z) 50-160/5.5	6306-2RS1	6306-ZZ C3	6206-2RS1	6206-ZZ C3
	3(.)M(Z) 50-160/7.5				
	3(.)M(Z) 50-200/9.2	6308-2RS1	6308-ZZ C3	6208-2RS1	6208-ZZ C3
	3(.)M(Z) 50-200/11				
	3(.)M(Z) 50-200/15	6309-2RS1	6309-ZZ C3	6309-2RS1	6309-ZZ C3
	3(.)M(Z) 65-125/4	6206-2RS1	6206-ZZ C3	6205-2RSH	6205-ZZ C3
	3(.)M(Z) 65-125/5.5	6306-2RS1	6306-ZZ C3	6206-2RS1	6206-ZZ C3
	3(.)M(Z) 65-125/7.5				
-	3(.)M(Z) 65-160/7.5				
	3(.)M(Z) 65-160/9.2	6308-2RS1	6308-ZZ C3	6208-2RS1	6208-ZZ C3
	3(.)M(Z) 65-160/11				
	3(.)M(Z) 65-160/15	6309-2RS1	6309-ZZ C3	6309-2RS1	6309-ZZ C3
	3(.)M(Z) 65-200/15				
	3(.)M(Z) 65-200/18.5				
	3(.)M(Z) 65-200/22				
	3LM 80-160/11	6308-2RS1	6308-ZZ C3	6208-2RS1	6208-ZZ C3
	3LM 80-160/15R	6309-2RS1	6309-ZZ C3	6309-2RS1	6309-ZZ C3
	3LM 80-160/15				
	3LM 80-160/18.5				

(*) Only for IE3 Motors

CONSTRUCTION

50Hz

Rev. V

BEARINGS 3(.)S-3(.)P

Pump type	Ball bearing	
	Pump side	Fan side
3(.)S(Z) 32-125/1.1	6204-2Z C3	6204-2Z C3
3(.)S(Z) 32-160/1.5	6205-2Z C3	6205-2Z C3
3(.)S(Z) 32-160/2.2		
3(.)S(Z) 32-200/3	6206-2Z C3	6206-2Z C3
3(.)S(Z) 32-200/4	6306-2Z C3	6306-2Z C3
3(.)S(Z) 32-200/5.5	6208-2Z C3	6208-2Z C3
3(.)S(Z) 32-200/7.5		
3(.)S(Z) 40-125/1.5	6205-2Z C3	6205-2Z C3
3(.)S(Z) 40-125/2.2		
3(.)S(Z) 40-160/3	6206-2Z C3	6206-2Z C3
3(.)S(Z) 40-160/4	6306-2Z C3	6306-2Z C3
3(.)S(Z) 40-200/5.5	6208-2Z C3	6208-2Z C3
3(.)S(Z) 40-200/7.5		
3(.)S(Z) 40-200/11	6309-2Z C3	6309-2Z C3
3(.)S(Z) 50-125/2.2	6205-2Z C3	6205-2Z C3
3(.)S(Z) 50-125/3	6206-2Z C3	6206-2Z C3
3(.)S(Z) 50-125/4	6306-2Z C3	6306-2Z C3
3(.)S(Z) 50-160/5.5	6208-2Z C3	6208-2Z C3
3(.)S(Z) 50-160/7.5		
3(.)S(Z) 50-200/9.2		
3(.)S(Z) 50-200/11	6309-2Z C3	6309-2Z C3
3(.)S(Z) 50-200/15		
3(.)S(Z) 65-125/4	6306-2Z C3	6306-2Z C3
3(.)S(Z) 65-125/5.5	6208-2Z C3	6208-2Z C3
3(.)S(Z) 65-125/7.5		
3(.)S(Z) 65-160/7.5		
3(.)S(Z) 65-160/9.2		
3(.)S(Z) 65-160/11	6309-2Z C3	6309-2Z C3
3(.)S(Z) 65-160/15		
3(.)S(Z) 65-200/15		
3(.)S(Z) 65-200/18.5		
3(.)S(Z) 65-200/22	6311 C3	6311 C3 1)
3LS 65-250/30	6312 C3	6312 C3 1)
3LS 65-250/37		1)
3LS 80-160/11	6309-2Z C3	6309-2Z C3
3LS 80-160/15R		
3LS 80-160/15		
3LS 80-160/18.5		
3LS 80-200/22	6311 C3	6311 C3 1)
3LS 80-200/30	6312 C3	6312 C3 1)
3LS 80-200/37		1)
3LS 80-250/37		1)
3LS 80-250/45	6313 C3	6313 C3 1)
3LS 80-250/55	6314 C3	6314 C3 1)

Pump type	Ball bearing			
	Pump		Motor	
	Pump side	Motor side	Pump side	Fan side
3(.)P 32-125/1.1	6306-2RS1	6206-2RS1	6204-2Z C3	6204-2Z C3
3(.)P 32-160/1.5			6205-2Z C3	6205-2Z C3
3(.)P 32-160/2.2				
3(.)P 32-200/3	6308-2RS1	6306-2RS1	6206-2Z C3	6206-2Z C3
3(.)P 32-200/4			6306-2Z C3	6306-2Z C3
3(.)P 32-200/5.5			6208-2Z C3	6208-2Z C3
3(.)P 32-200/7.5				
3(.)P 40-125/1.5	6306-2RS1	6206-2RS1	6205-2Z C3	6205-2Z C3
3(.)P 40-125/2.2				
3(.)P 40-160/3			6206-2Z C3	6206-2Z C3
3(.)P 40-160/4			6306-2Z C3	6306-2Z C3
3(.)P 40-200/5.5	6308-2RS1	6306-2RS1	6208-2Z C3	6208-2Z C3
3(.)P 40-200/7.5				
3(.)P 40-200/11			6309-2Z C3	6309-2Z C3
3(.)P 50-125/2.2	6306-2RS1	6206-2RS1	6205-2Z C3	6205-2Z C3
3(.)P 50-125/3			6206-2Z C3	6206-2Z C3
3(.)P 50-125/4			6306-2Z C3	6306-2Z C3
3(.)P 50-160/5.5	6308-2RS1	6306-2RS1	6208-2Z C3	6208-2Z C3
3(.)P 50-160/7.5				
3(.)P 50-200/9.2				
3(.)P 50-200/11			6309-2Z C3	6309-2Z C3
3(.)P 50-200/15				
3(.)P 65-125/4	6306-2RS1	6206-2RS1	6306-2Z C3	6306-2Z C3
3(.)P 65-125/5.5			6208-2Z C3	6208-2Z C3
3(.)P 65-125/7.5				
3(.)P 65-160/7.5	6308-2RS1	6306-2RS1		
3(.)P 65-160/9.2				
3(.)P 65-160/11			6309-2Z C3	6309-2Z C3
3(.)P 65-160/15				
3(.)P 65-200/15				
3(.)P 65-200/18.5				
3(.)P 65-200/22			6311 C3	6311 C3 1)
3LP 65-250/30	6310-2RS1	6308-2RS1	6312 C3	6312 C3 1)
3LP 65-250/37				1)
3LP 80-160/11	6308-2RS1 C3	6306-2RS1 C3	6309-2Z C3	6309-2Z C3
3LP 80-160/15R				
3LP 80-160/15				
3LP 80-160/18.5				
3LP 80-200/22	6310-2RS1 C3	6308-2RS1 C3	6311 C3	6311 C3 1)
3LP 80-200/30			6312 C3	6312 C3 1)
3LP 80-200/37				1)
3LP 80-250/37				1)
3LP 80-250/45			6313 C3	6313 C3 1)
3LP 80-250/55			6314 C3	6314 C3 1)

1) Motor available with lubrificator for regular re-greasing of bearing.

CONSTRUCTION

50Hz

Rev. V

MECHANICAL SEAL (standard, H, E and Special version)

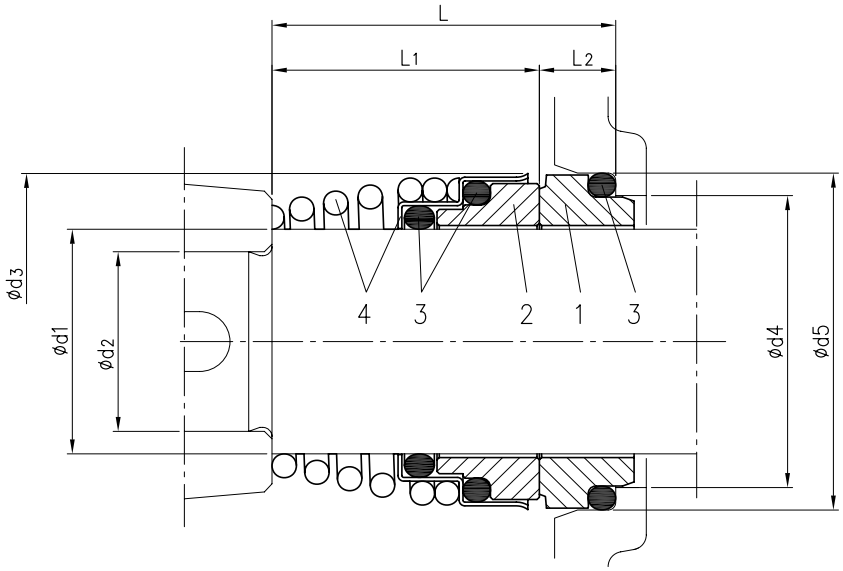

Version	Pump type	Dimensions								Material			
		d1	d2	d3	d4	d5	L	L1	L2	1 Stationary seal ring	2 Rotary seal ring	3 Rubber	4 Frame + Spring
Standard	32-125/160/200 40-125/160/200 50-125/160/200 65-125 65-160/7.5-9.2-11	22	19	38	31	37	37.5	27.5	10	Carbon	Ceramic	NBR	EN 1.4401 (AISI 316)
	65-160/15 65-200	30	24	46	39	45	42.5	32.5	10				
H	32-125/160/200 40-125/160/200 50-125/160/200 65-125 65-160/7.5-9.2-11	22	19	38	31	37	37.5	27.5	10	Carbon	Ceramic	FPM	EN 1.4401 (AISI 316)
	65-160/15 65-200/250 80-160/200	30	24	46	39	45	42.5	32.5	10				
	80-250	35	29	50	44	50	42.5	32.5	10				
E	32-125/160/200 40-125/160/200 50-125/160/200 65-125 65-160/7.5-9.2-11	22	19	38	31	37	37.5	27.5	10	Carbon	Ceramic	EPDM	EN 1.4401 (AISI 316)
	65-160/15 65-200/250 80-160/200	30	24	46	39	45	42.5	32.5	10				
Q1AEGG*	65-160/15 65-200/250 80-160/200	30	24	46	39	45	42.5	32.5	10	Silicon Carbide	Metallised Carbon	EPDM	EN 1.4401 (AISI 316)

* The drawing is only indicative

MECHANICAL SEAL (L version ø22)

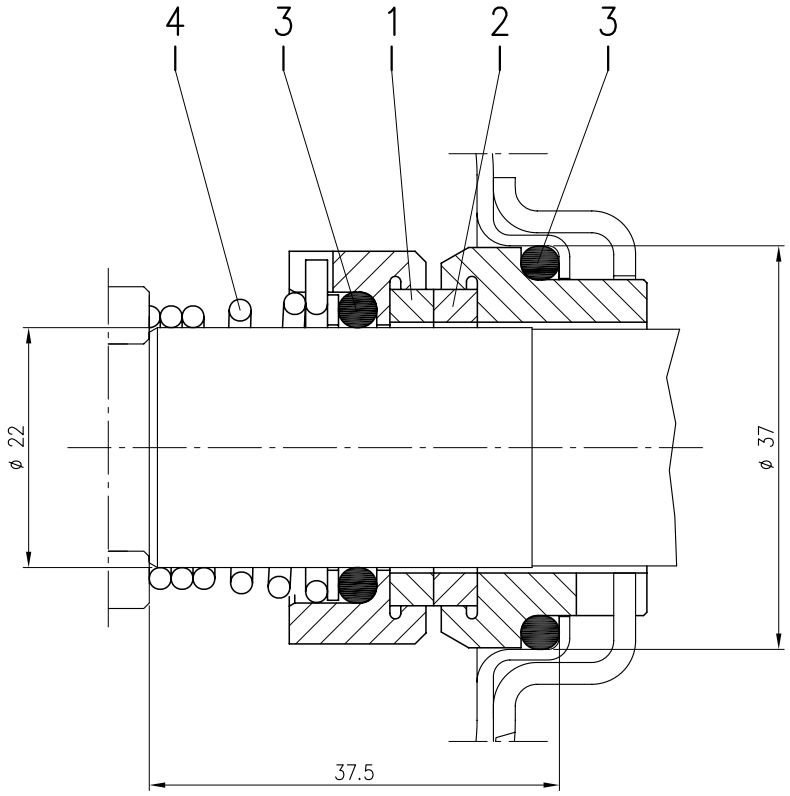

Version	Pump type	Material			
		1 Stationary seal ring	2 Rotary seal ring	3 Rubber	4 Frame + spring
L ø22	32-125/160/200 40-125/160/200 50-125/160/200 65-125 65-160/7.5-9.2-11	SiC	SiC	FPM	EN 1.4571 (AISI 316Ti)

CONSTRUCTION

50Hz

Rev. V

MECHANICAL SEAL (L version ø30-35)

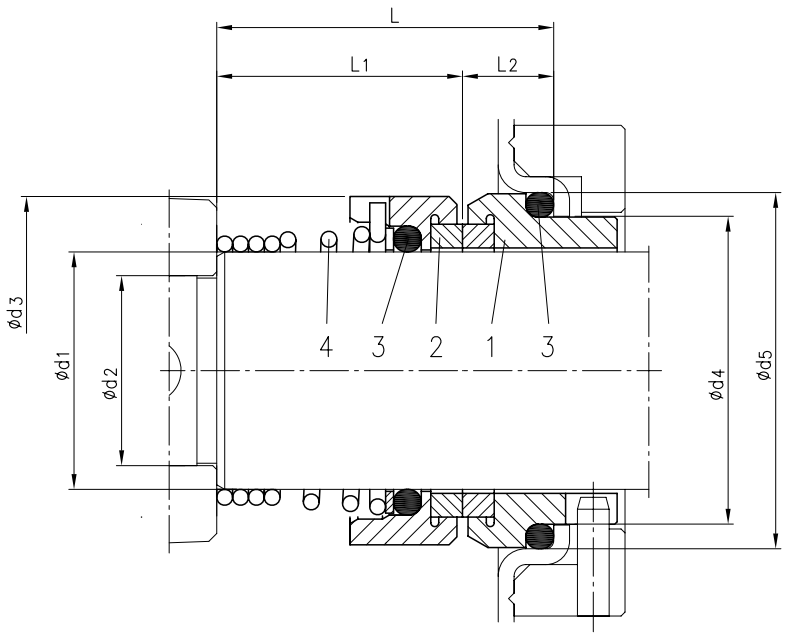

Version	Pump type	Dimensions								Material			
		d1	d2	d3	d4	d5	L	L1	L2	1 Stationary seal ring	2 Rotary seal ring	3 Rubber	4 Frame + spring
L ø30	65-160/15 65-200/250 80-160/200	30	24	44	39	45	42.5	31	11.5	SiC	SiC	FPM	EN 1.4571 (AISI 316Ti)
L ø35	80-250	35	29	49	44	50	42.5	31	11.5				

CONSTRUCTION

50Hz

Rev. V

MECHANICAL SEAL (HS version and Special version ø22)

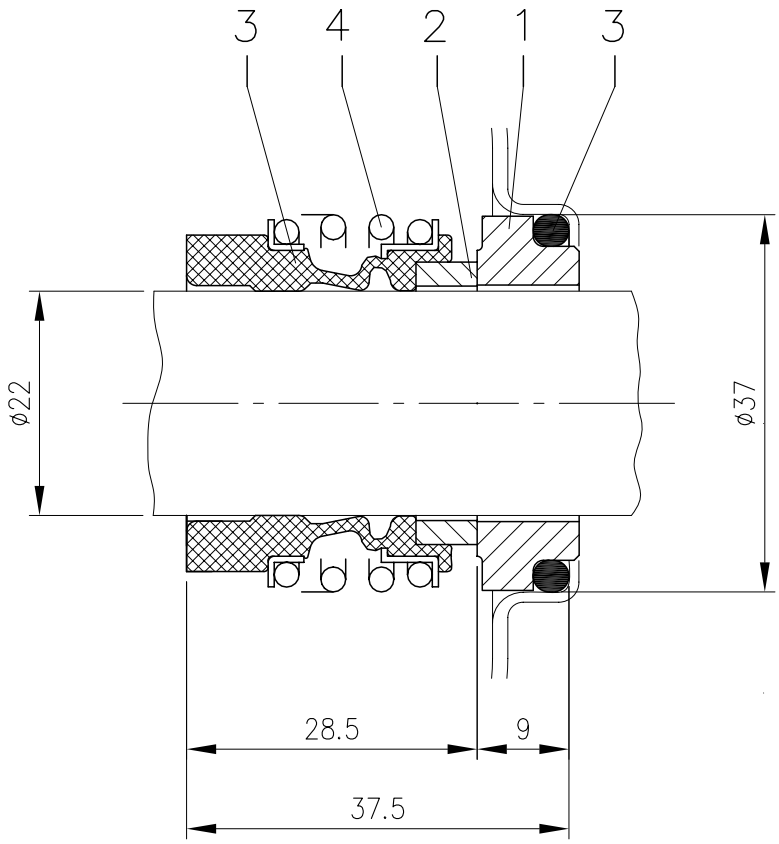

Version	Pump type	Material 1 Stationary seal ring	2 Rotary seal ring	3 Rubber	4 Frame + spring
HS ø22	32-125/160/200 40-125/160/200 50-125/160/200 65-125 65-160/7.5-9.2-11	SiC	SiC	FPM	EN 1.4571 (AISI 316Ti)
Q1AEGG*	32-125/160/200 40-125/160/200 50-125/160/200 65-125 65-160/7.5-9.2-11	SiC	Metallised Carbon	EPDM	EN 1.4401 (AISI 316)

* The drawing is only indicative

MECHANICAL SEAL (HS version ø30)

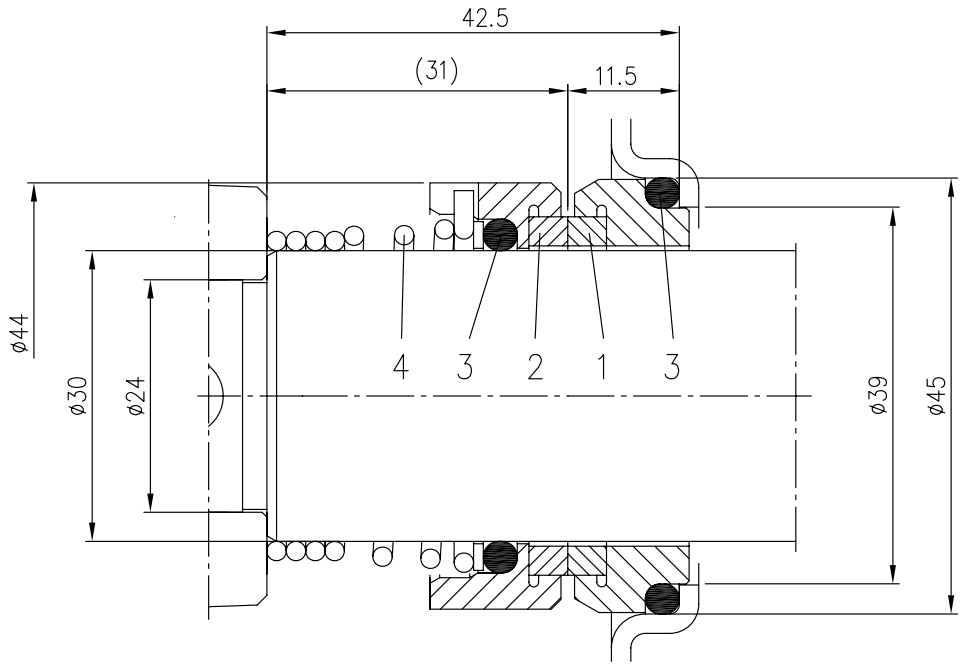

Version	Pump type	Material			
		1	2	3	4
		Stationary seal ring	Rotary seal ring	Rubber	Frame + spring
HS ø 30	65-160/15 65-200	SiC	SiC	FPM	EN 1.4571 (AISI 316 Ti)

CONSTRUCTION

50Hz

Rev. V

MECHANICAL SEAL (HW, HSW and Special version)

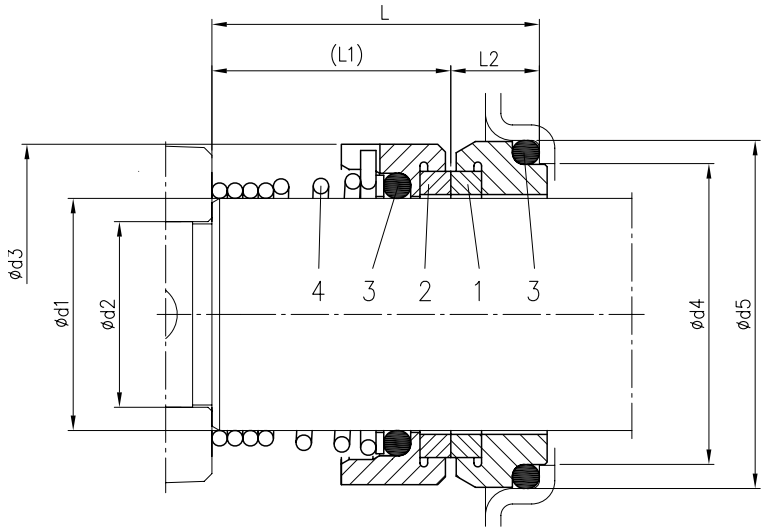

Version	Pump type	Dimensions								Material			
		d1	d2	d3	d4	d5	L	L1	L2	1 Stationary seal ring	2 Rotary seal ring	3 Rubber	4 Frame + spring
HW	32-125/160/200 40-125/160/200 50-125/160/200 65-125 65-160/7.5-9.2-11	22	19	38	31	37	37.5	27.5	10	Tungsten Carbide	Tungsten Carbide	FPM	EN 1.4401 (AISI 316)
	65-160/15 65-200/250 80-160/200	30	24	46	39	45	42.5	32.5	10				
	80-250	35	29	50	44	50	42.5	32.5	10				
HSW	32-125/160/200 40-125/160/200 50-125/160/200 65-125 65-160/7.5-9.2-11	22	19	38	31	37	37.5	27.5	10	Tungsten Carbide	SiC	FPM	EN 1.4401 (AISI 316)
	65-160/15 65-200/250 80-160/200	30	24	46	39	45	42.5	32.5	10				
	80-250	35	29	50	44	50	42.5	32.5	10				
U3U3EGG*	32-125/160/200 40-125/160/200 50-125/160/200 65-125 65-160/7.5-9.2-11	22	19	38	31	37	37,5	27,5	10	Tungsten Carbide	Tungsten Carbide	EPDM	EN 1.4401 (AISI 316)
Q1Q1EGG*	32-125/160/200 40-125/160/200 50-125/160/200 65-125 65-160/7.5-9.2-11	22	19	38	31	37	37,5	27,5	10	Silicon Carbide	Silicon Carbide	EPDM	EN 1.4401 (AISI 316)
	65-160/15 65-200/250 80-160/200	30	24	46	39	45	42.5	32.5	10				
Q1U3EGG*	32-125/160/200 40-125/160/200 50-125/160/200 65-125 65-160/7.5-9.2-11	22	19	38	31	37	37,5	27,5	10	Silicon Carbide	Tungsten Carbide	EPDM	EN 1.4401 (AISI 316)
	65-160/15 65-200/250 80-160/200	30	24	46	39	45	42.5	32.5	10				
U3CEGG*	32-125/160/200 40-125/160/200 50-125/160/200 65-125 65-160/7.5-9.2-11	22	19	38	31	37	37,5	27,5	10	Tungsten Carbide	Silicon Carbide	EPDM	EN 1.4401 (AISI 316)
	65-160/15 65-200/250 80-160/200	30	24	46	39	45	42.5	32.5	10				

* The drawing is only indicative

CONSTRUCTION

50Hz

Rev. V

MECHANICAL SEAL (ES version)

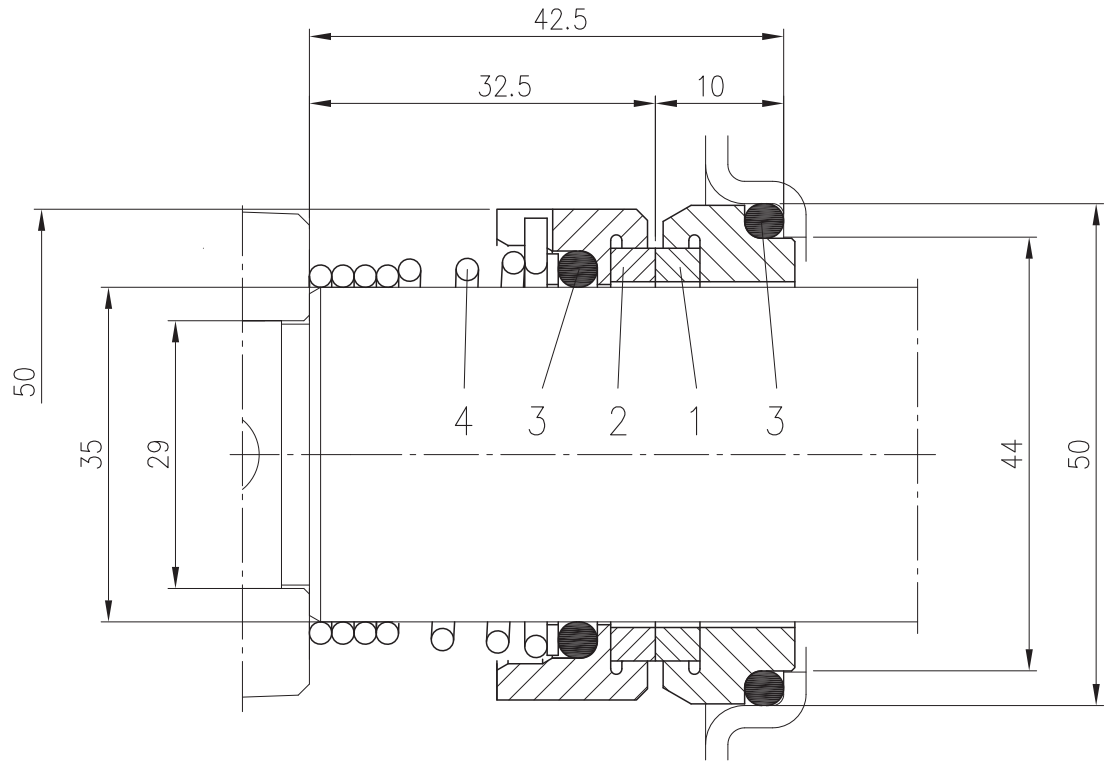

Pump type	Material			
	1 Stationary seal ring	2 Rotary seal ring	3 Rubber	4 Frame + Spring
80-250	Carbon	SiC	EPDM	EN 1.4401 (AISI 316)

CONSTRUCTION

50Hz

Rev. V

COUPLING

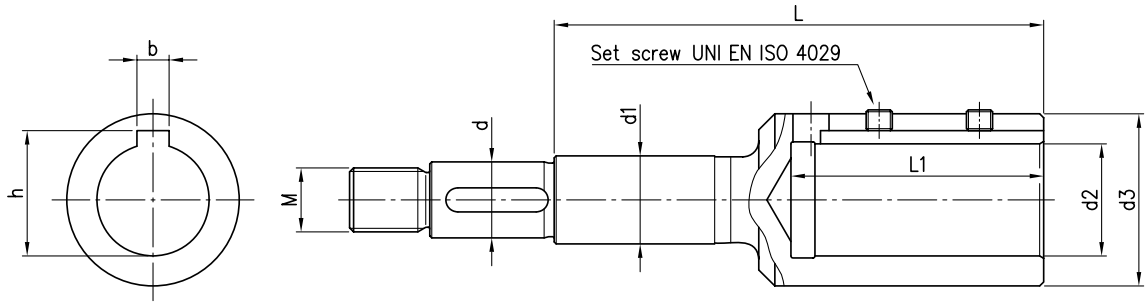

Pump type	Power		Motor	Dimensions mm									
	[kW]	[HP]	Size	d	d1	d2	d3	M	L	L1	b	h	Set screw
32-125/1.1	1.1	1.5	80	19	22	19	33	M16x1.5	98	43	6	21.8	M6x6
32-160/1.5	1.5	2	90	19	22	24	39	M16x1.5	110	53	8	27.3	M8x8
32-160/2.2	2.2	3	90	19	22	24	39	M16x1.5	110	53	8	27.3	M8x8
32-200/3.0	3	4	100	19	22	28	43	M16x1.5	122	63	8	31.3	M8x8
32-200/4.0	4	5.5	112	19	22	28	43	M16x1.5	122	63	8	31.3	M8x8
32-200/5.5	5.5	7.5	132	19	22	38	58	M16x1.5	145	84	10	41.3	M8x8
32-200/7.5	7.5	10	132	19	22	38	58	M16x1.5	145	84	10	41.3	M8x8
40-125/1.5	1.5	2	90	19	22	24	39	M16x1.5	110	53	8	27.3	M8x8
40-125/2.2	2.2	3	90	19	22	24	39	M16x1.5	110	53	8	27.3	M8x8
40-160/3.0	3	4	100	19	22	28	43	M16x1.5	122	63	8	31.3	M8x8
40-160/4.0	4	5.5	112	19	22	28	43	M16x1.5	122	63	8	31.3	M8x8
40-200/5.5	5.5	7.5	132	19	22	38	58	M16x1.5	145	84	10	41.3	M8x8
40-200/7.5	7.5	10	132	19	22	38	58	M16x1.5	145	84	10	41.3	M8x8
40-200/11	11	15	160	19	22	42	63	M16x1.5	178	114	12	45.3	M8x8
50-125/2.2	2.2	3	90	19	22	24	39	M16x1.5	110	53	8	27.3	M8x8
50-125/3.0	3	4	100	19	22	28	43	M16x1.5	122	63	8	31.3	M8x8
50-125/4.0	4	5.5	112	19	22	28	43	M16x1.5	122	63	8	31.3	M8x8
50-160/5.5	5.5	7.5	132	19	22	38	58	M16x1.5	145	84	10	41.3	M8x8
50-160/7.5	7.5	10	132	19	22	38	58	M16x1.5	145	84	10	41.3	M8x8
50-200/9.2	9.2	12.5	132	19	22	38	58	M16x1.5	145	84	10	41.3	M8x8
50-200/11	11	15	160	19	22	42	63	M16x1.5	178	114	12	45.3	M8x8
50-200/15	15	20	160	22	22	42	63	M18x1.5	209	114	12	45.3	M8x8
65-125/4.0	4	5.5	112	19	22	28	43	M16x1.5	122	63	8	31.3	M8x8
65-125/5.5	5.5	7.5	132	19	22	38	58	M16x1.5	145	84	10	41.3	M8x8
65-125/7.5	7.5	10	132	19	22	38	58	M16x1.5	145	84	10	41.3	M8x8
65-160/7.5	7.5	10	132	19	22	38	58	M16x1.5	145	84	10	41.3	M8x8
65-160/9.2	9.2	12.5	132	19	22	38	58	M16x1.5	145	84	10	41.3	M8x8
65-160/11	11	15	160	19	22	42	63	M16x1.5	178	114	12	45.3	M8x8
65-160/15	15	20	160	24	30	42	63	M20x1.5	184	114	12	45.3	M8x8
65-200/15	15	20	160	24	30	42	63	M20x1.5	184	114	12	45.3	M8x8
65-200/18.5	18.5	25	160	24	30	42	63	M20x1.5	184	114	12	45.3	M8x8
65-200/22	22	30	180	24	30	48	72	M20x1.5	184	114	14	51.8	M10x10
65-250/30	30	40	200	24	30	55	85	M20x1.5	184	114	16	59.3	M12x12
65-250/37	37	50	200	24	30	55	85	M20x1.5	184	114	16	59.3	M12x12
80-160/11	11	15	160	24	30	42	63	M20x1.5	184	114	12	45.3	M8x8
80-160/15R	15	20	160	24	30	42	63	M20x1.5	184	114	12	45.3	M8x8
80-160/15	15	20	160	24	30	42	63	M20x1.5	184	114	12	45.3	M8x8
80-160/18.5	18.5	25	160	24	30	42	63	M20x1.5	184	114	12	45.3	M8x8
80-200/22	22	30	180	24	30	48	72	M20x1.5	184	114	14	51.8	M10x10
80-200/30	30	40	200	24	30	55	85	M20x1.5	184	114	16	59.3	M12x12
80-200/37	37	50	200	24	30	55	85	M20x1.5	184	114	16	59.3	M12x12
80-250/37	37	50	200	29	35	55	85	M24x2	206	114	16	59.3	M12x12
80-250/45	45	60	225	29	35	55	85	M24x2	206	114	16	59.3	M12x12
80-250/55	55	75	250	29	35	60	89	M24x2	218	144	18	64.4	M12x12

CONSTRUCTION

50Hz

Rev. V

FLEXIBLE COUPLING

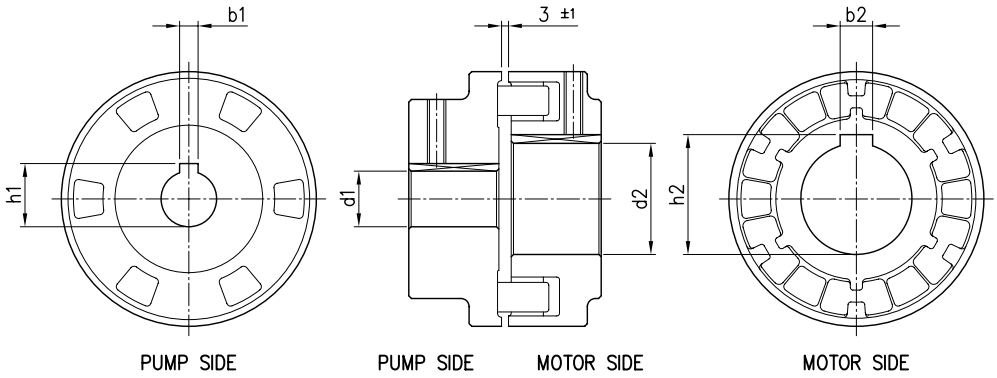

Pump type	Power		Motor	Dimensions mm					
	[KW]	[HP]	Size	d1	b1	h1	d2	b2	h2
32-125/1.1	1.1	1.5	80	24	8	27.3	19	6	21.8
32-160/1.5	1.5	2	90	24	8	27.3	24	8	27.3
32-160/2.2	2.2	3	90	24	8	27.3	24	8	27.3
32-200/3.0	3	4	100	24	8	27.3	28	8	31.3
32-200/4.0	4	5.5	112	24	8	27.3	28	8	31.3
32-200/5.5	5.5	7.5	132	24	8	27.3	38	10	41.3
32-200/7.5	7.5	10	132	24	8	27.3	38	10	41.3
40-125/1.5	1.5	2	90	24	8	27.3	24	8	27.3
40-125/2.2	2.2	3	90	24	8	27.3	24	8	27.3
40-160/3.0	3	4	100	24	8	27.3	28	8	31.3
40-160/4.0	4	5.5	112	24	8	27.3	28	8	31.3
40-200/5.5	5.5	7.5	132	24	8	27.3	38	10	41.3
40-200/7.5	7.5	10	132	24	8	27.3	38	10	41.3
40-200/11	11	15	160	24	8	27.3	42	12	45.3
50-125/2.2	2.2	3	90	24	8	27.3	24	8	27.3
50-125/3.0	3	4	100	24	8	27.3	28	8	31.3
50-125/4.0	4	5.5	112	24	8	27.3	28	8	31.3
50-160/5.5	5.5	7.5	132	24	8	27.3	38	10	41.3
50-160/7.5	7.5	10	132	24	8	27.3	38	10	41.3
50-200/9.2	9.2	12.5	132	24	8	27.3	38	10	41.3
50-200/11	11	15	160	24	8	27.3	42	12	45.3
50-200/15	15	20	160	24	8	27.3	42	12	45.3
65-125/4.0	4	5.5	112	24	8	27.3	28	8	31.3
65-125/5.5	5.5	7.5	132	24	8	27.3	38	10	41.3
65-125/7.5	7.5	10	132	24	8	27.3	38	10	41.3
65-160/7.5	7.5	10	132	24	8	27.3	38	10	41.3
65-160/9.2	9.2	12.5	132	24	8	27.3	38	10	41.3
65-160/11	11	15	160	24	8	27.3	42	12	45.3
65-160/15	15	20	160	24	8	27.3	42	12	45.3
65-200/15	15	20	160	24	8	27.3	42	12	45.3
65-200/18.5	18.5	25	160	24	8	27.3	42	12	45.3
65-200/22	22	30	180	24	8	27.3	48	14	51.8
65-250/30	30	40	200	32	10	35.3	55	16	59.3
65-250/37	37	50	200	32	10	35.3	55	16	59.3
80-160/11	11	15	160	24	8	27.3	42	12	45.3
80-160/15R	15	20	160	24	8	27.3	42	12	45.3
80-160/15	15	20	160	24	8	27.3	42	12	45.3
80-160/18.5	18.5	25	160	24	8	27.3	42	12	45.3
80-200/22	22	30	180	32	10	35.3	48	14	51.8
80-200/30	30	40	200	32	10	35.3	55	16	59.3
80-200/37	37	50	200	32	10	35.3	55	16	59.3
80-250/37	37	50	200	32	10	35.3	55	16	59.3
80-250/45	45	60	225	32	10	35.3	55	16	59.3
80-250/55	55	75	250	32	10	35.3	60	18	64.4

FITTINGS

COUNTERFLANGE ZINCKED STEEL

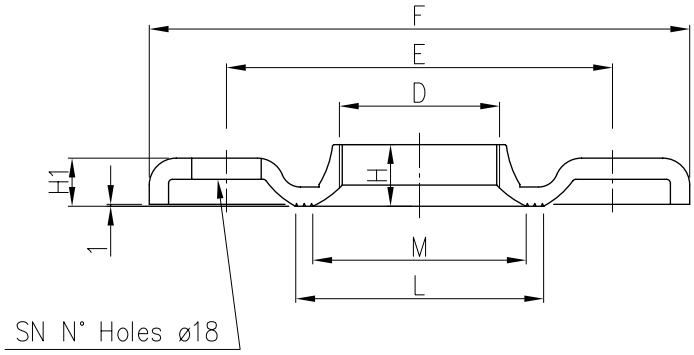

Counterflange									Screw	
DN	D	E	F	H	H1	L	M	SN	DIMENSIONS	MATERIAL
32	G 1 1/4	100	140	15	11.5	67	50	4	M16x55	Gv. Steel 8.8 strenght class ISO 898-1
40	G 1 1/2	110	150	17.5	11.5	72	58	4		
50	G2	125	165	19	15	89	70	4		
65	G 2 1/2	145	185	23	14	104	88	4		
80	G3	160	200	24	16	117.5	100	8	M16x60	
100	G4	180	220	29	16	144	125	8		

COUNTERFLANGE EN 1.4404 (AISI 316L)

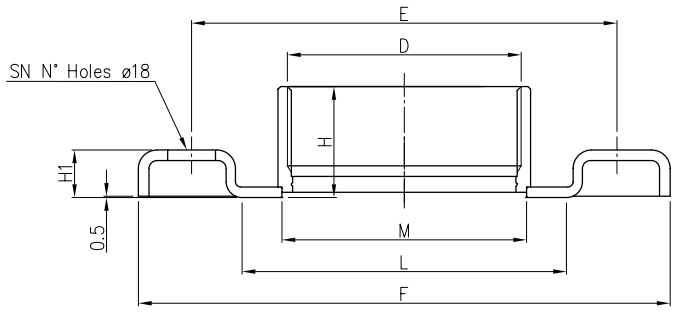

Counterflange									Screw	
DN	D	E	F	H	H1	L	M	SN	DIMENSIONS	MATERIAL
32	G 1 1/4	100	140	29.5	14	66	44	4	M16x55	A2-70 class ISO 3506-1
40	G 1 1/2	110	150	29.5	14	71	50.5			
50	G 2	125	165	34	16	83	63			
65	G 2 1/2	145	185	40	16	103	80			
80	G3	160	200	42	18	122	92	8	M16x60	

CONSTRUCTION

50Hz

Rev. V

COUNTERFLANGE EN 1.4404 (AISI 316L) DN100

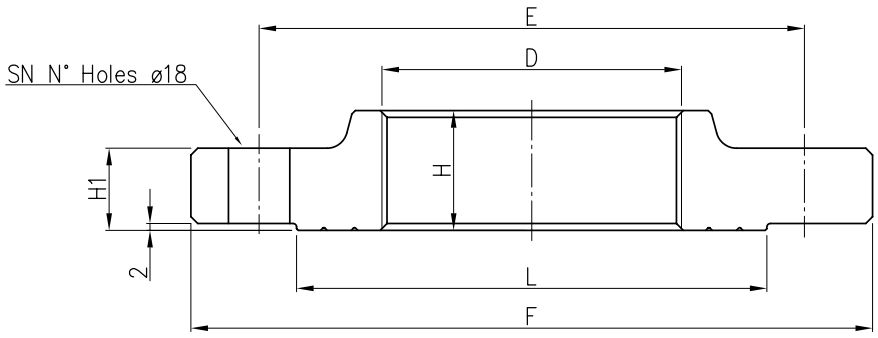

Counterflange								Screw	
DN	D	E	F	H	H1	L	SN	DIMENSIONS	MATERIAL
100	G4	180	220	35	20	150	8	M16x70	A2-70 class ISO 3506-1

GASKET

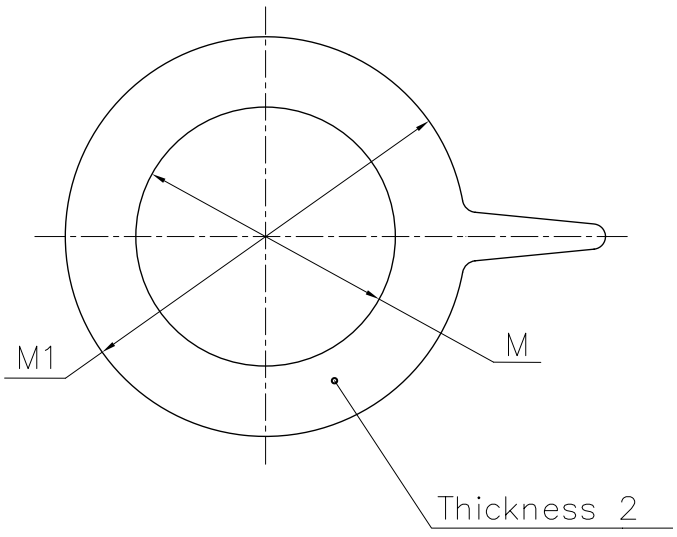

DN	M	M1
32	38	82
40	50	93
50	60	107
65	80	125
80	90	140
100	115	160

Material : EPDM for standard version
FPM for L version

DIMENSIONS AND WEIGHT

50Hz

Rev. V

PUMP 3(.)M 32, 40, 50, 65-125/160

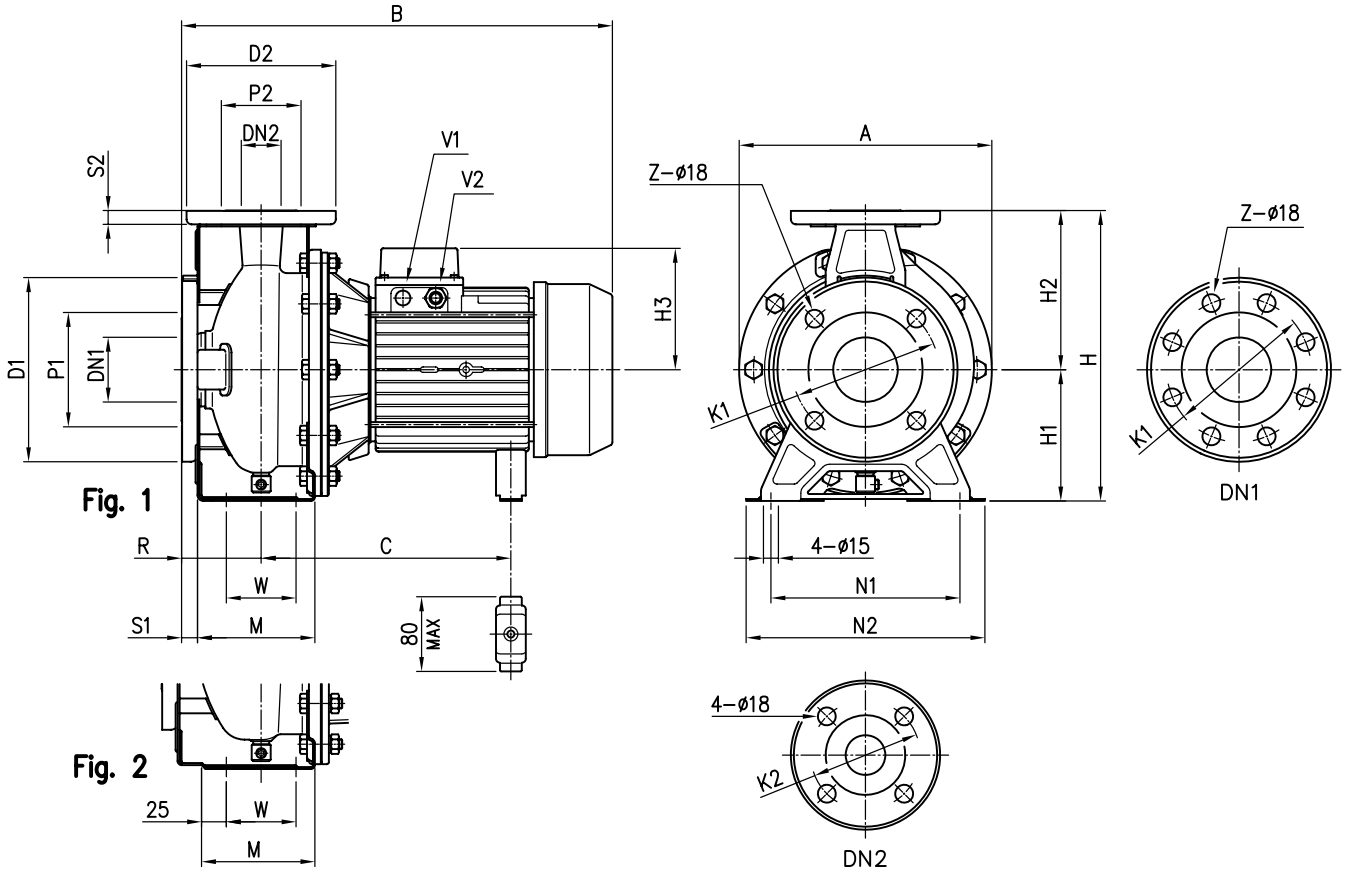

Model	Dimensions (mm)																																		Weight [kgf]		
	Ø	Ø	Ø	Ø		Z		Ø	Ø	Ø	Ø						H3							B			C			V1		V2					
	DN1	P1	K1	D1	S1	[1]	[2]	DN2	P2	K2	D2	S2	Fig.	H	H1	H2	[1~]	[3~]	(*) [3~]	R	W	M	N1	N2	A	[1~]	[3~]	(*) [3~]	[1~]	[3~]	(*) [3~]	(*) [3~]	[3~]	(*) [3~]	[3~]	[1~]	[1~]	[3~]	(*) [3~]
32-125/1.1 (M)	50	95	125	165	16	4	-	32	75	100	140	14	1	252	112	140	141	124	119	80	70	114	140	190	213	408	407	431	219÷230	219÷230	232	-	-	PG 13.5	PG 13.5	M20x1.5	19.6	24.1	24.1
32-160/1.5 (M)	50	95	125	165	16	4	-	32	75	100	140	14	1	292	132	160	141	124	119	80	70	118	190	240	254	408	407	431	219÷230	219÷230	232	-	-	PG 13.5	PG 13.5	M20x1.5	22.5	27	27
32-160/2.2 (M)	50	95	125	165	16	4	-	32	75	100	140	14	1	292	132	160	141	124	119	80	70	118	190	240	254	408	432	431	219÷230	244÷255	232	-	-	PG 13.5	PG 13.5	M20x1.5	27.7	28	28
32-200/3.0	50	95	125	165	16	4	-	32	75	100	140	14	1	340	160	180	-	124	124	80	70	119	190	240	296	-	471	471	-	244÷255	244÷255	-	-	PG 13.5	PG 13.5	-	-	35.1	35.1
32-200/4.0	50	95	125	165	16	4	-	32	75	100	140	14	1	340	160	180	-	141	141	80	70	119	190	240	296	-	494	494	-	253	253	-	-	PG 16	PG 16	-	-	38.2	38.2
32-200/5.5	50	95	125	165	16	4	-	32	75	100	140	14	1	340	160	180	-	150	150	80	70	119	190	240	296	-	519	519	-	275	275	M20x1.5	PG 13.5	PG 16	PG 16	-	-	52.2	52.2
32-200/7.5	50	95	125	165	16	4	-	32	75	100	140	14	1	340	160	180	-	150	150	80	70	119	190	240	296	-	-	539	-	275	275	-	PG 13.5	PG 16	-	-	-	-	60.1
40-125/1.5 (M)	65	115	145	185	16	4	-	40	80	110	150	14	1	252	112	140	141	124	119	80	70	114	160	210	213	408	407	431	219÷230	219÷230	232	-	-	PG 13.5	PG 13.5	M20x1.5	20,1	24.6	24.6
40-125/2.2 (M)	65	115	145	185	16	4	-	40	80	110	150	14	1	252	112	140	141	124	119	80	70	114	160	210	213	408	432	431	219÷230	244÷255	232	-	-	PG 13.5	PG 13.5	M20x1.5	25,8	26.1	26.1
40-160/3.0	65	115	145	185	16	4	-	40	80	110	150	14	1	292	132	160	-	124	124	80	70	118	190	240	254	-	471	471	-	244÷255	244÷255	-	-	PG 13.5	PG 13.5	-	-	26.6	26.6
40-160/4.0	65	115	145	185	16	4	-	40	80	110	150	14	1	292	132	160	-	141	141	80	70	118	190	240	254	-	494	494	-	253	253	-	-	PG 16	PG 16	-	-	40.8	40.8
40-200/5.5	65	115	145	185	16	4	-	40	80	110	150	14	2	340	160	180	-	150	150	100	70	115	212	265	296	-	539	539	-	275	275	M20x1.5	PG 13.5	PG 16	PG 16	-	-	52.5	52.5
40-200/7.5	65	115	145	185	16	4	-	40	80	110	150	14	2	340	160	180	-	150	150	100	70	115	212	265	296	-	-	559	-	275	275	-	PG 13.5	PG 16	-	-	-	-	59.3
40-200/11	65	115	145	185	16	4	-	40	80	110	150	14	2	340	160	180	-	178	178	100	70	115	212	265	296	-	-	595	-	359	359	-	PG 13.5	PG 21	-	-	-	-	69.6
50-125/2.2 (M)	65	115	145	185	16	4	-	50	95	125	165	16	2	292	132	160	141	124	119	100	70	114	190	240	254	428	452	451	219÷230	244÷255	232	-	-	PG 13.5	PG 13.5	M20x1.5	29,4	32	32
50-125/3.0	65	115	145	185	16	4	-	50	95	125	165	16	2	292	132	160	-	124	124	100	70	114	190	240	254	-	491	491	-	244÷255	244÷255	-	-	PG 13.5	PG 13.5	-	-	30.9	30.9
50-125/4.0	65	115	145	185	16	4	-	50	95	125	165	16	2	292	132	160	-	141	141	100	70	114	190	240	254	-	514	514	-	253	253	-	-	PG 16	PG 16	-	-	40.9	40.9
50-160/5.5	65	115	145	185	16	4	-	50	95	125	165	16	2	340	160	180	-	150	150	100	70	115	212	265	296	-	539	539	-	275	275	M20x1.5	PG 13.5	PG 16	PG 16	-	-	46.5	46.5
50-160/7.5	65	115	145	185	16	4	-	50	95	125	165	16	2	340	160	180	-	150	150	100	70	115	212	265	296	-	-	559	-	275	275	-	PG 13.5	PG 16	-	-	-	-	58.6
50-200/9.2	65	115	145	185	16	4	-	50	95	125	165	16	2	360	160	200	-	178	178	100	70	115	212	265	296	-	-	595	-	359	359	-	PG 13.5	PG 21	-	-	-	-	63.9
50-200/11	65	115	145	185	16	4	-	50	95	125	165	16	2	360	160	200	-	178	178	100	70	115	212	265	296	-	-	595	-	359	359	-	PG 13.5	PG 21	-	-	-	-	69.6
65-125/4	80	134	160	200	18	8	4	65	115	145	185	16	2	340	160	180	-	141	141	100	95	140	212	280	254	-	514	514	-	253	253	-	-	PG 16	PG 16	-	-	37.7	37.7
65-125/5.5	80	134	160	200	18	8	4	65	115	145	185	16	2	340	160	180	-	150	150	100	95	140	212	280	254	-	539	539	-	275	275	M20x1.5	PG 13.5	PG 16	PG 16	-	-	48,7	48.7
65-125/7.5	80	134	160	200	18	8	4	65	115	145	185	16	2	340	160	180	-	150	150	100	95	140	212	280	254	-	-	559	-	275	275	-	PG 13.5	PG 16	-	-	-	-	52.1
65-160/7.5	80	134	160	200	18	8	4	65	115	145	185	16	2	360	160	200	-	150	150	100	95	140	212	280	296	-	-	559	-	275	275	-	PG 13.5	PG 16	-	-	-	-	55.3
65-160/9,2	80	134	160	200	18	8	4	65	115	145	185	16	2	360	160	200	-	178	178	100	95	140	212	280	296	-	-	595	-	359	359	-	PG 13.5	PG 21	-	-	-	-	61
65-160/11	80	134	160	200	18	8	4	65	115	145	185	16	2	360	160	200	-	178	178	100	95	140	212	280	296	-	-	595	-	359	359	-	PG 13.5	PG 21	-	-	-	-	67.4

(*) Only for IE3 Motors [1] Standard [2] On request [1~] Only for single phase [3~] Only for three phase

DIMENSIONS AND WEIGHT

50Hz

Rev. V

PUMP 3(.)M 50-200, 65-160/15, 65-200

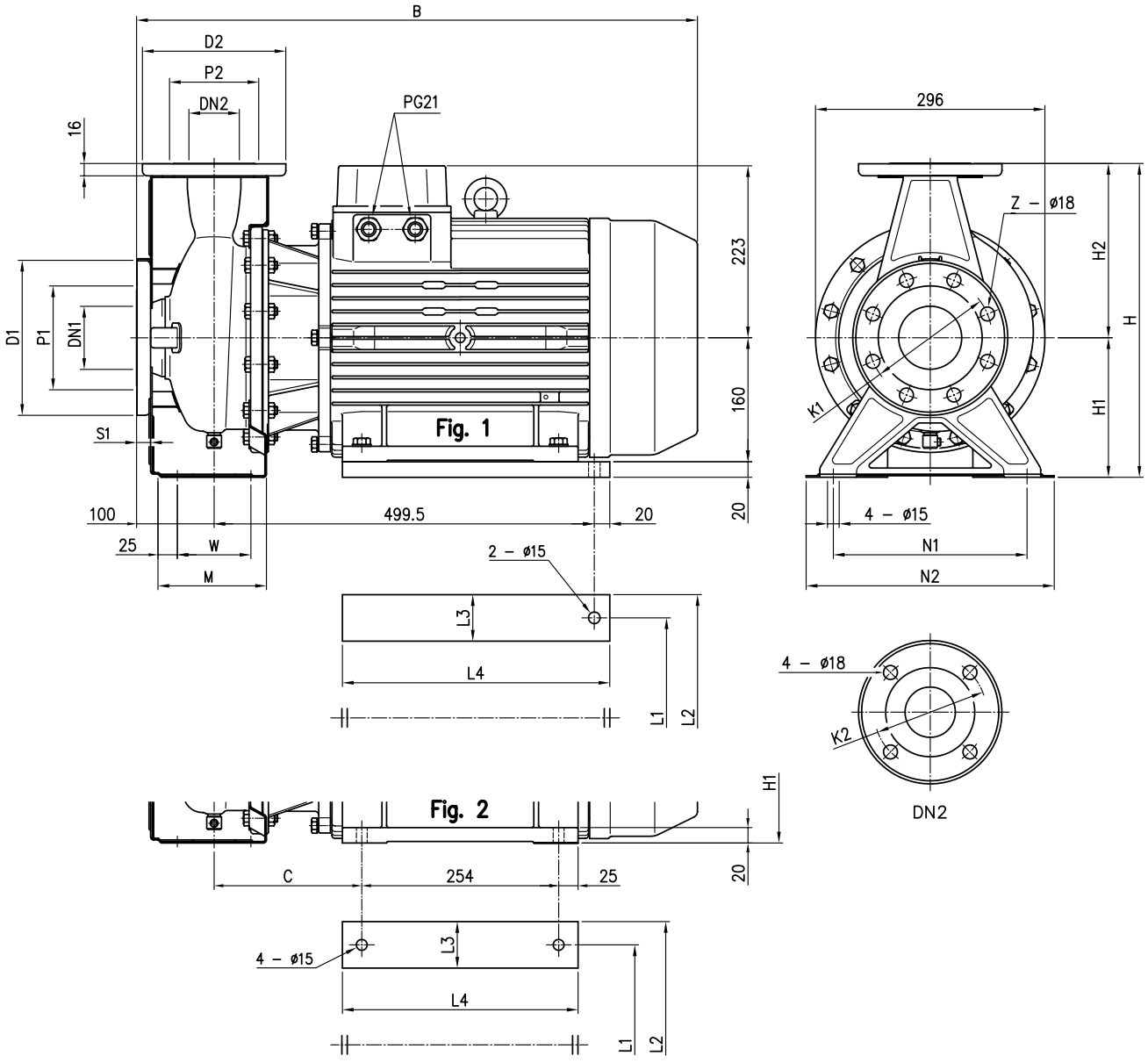

Model	Dimensions [mm]																								Weight [kgf]
	Ø DN1	Ø P1	Ø K1	Ø D1	S1	Z [1]	Z [2]	Ø DN2	Ø P2	Ø K2	Ø D2	Fig.	H	H1	H2	W	M	N1	N2	B	C	L1	L2	L3	L4	
50-200/15	65	115	145	185	16	4	-	50	95	125	165	2	360	160	200	70	115	212	265	723	190.5	254	318	65	304	105.1
65-160/15	80	134	160	200	18	8	4	65	115	145	185	2	360	160	200	95	140	212	280	732	199.5	254	318	65	304	107.1
65-200/15	80	134	160	200	18	8	4	65	115	145	185	1	405	180	225	95	140	250	320	732	-	254	314	60	345	110.1
65-200/18.5	80	134	160	200	18	8	4	65	115	145	185	1	405	180	225	95	140	250	320	732	-	254	314	60	345	125.3
65-200/22	80	134	160	200	18	8	4	65	115	145	185	1	405	180	225	95	140	250	320	732	-	254	314	60	345	136.1

[1] Standard [2] On request

DIMENSIONS AND WEIGHT

50Hz

Rev. V

PUMP 3LMZ 32, 40, 50-125/160/200/9.2/11, 65-125/160/7.5/9.2/11

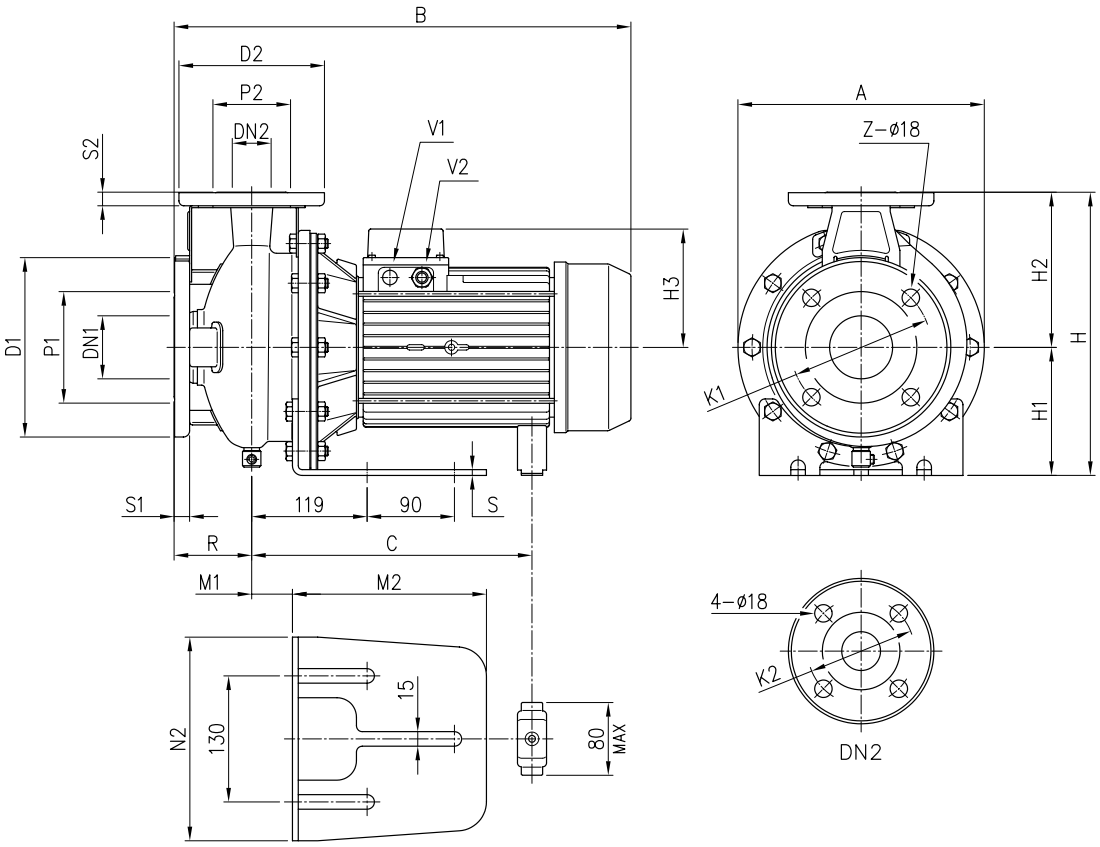

Model	Dimensions (mm)																													Weight [kgf]	
	Ø DN1	Ø P1	Ø K1	Ø D1	S1	Z	Ø DN2	Ø P2	Ø K2	Ø D2	S2	H	H1	H2	H3	(*)	R	M1	M2	S	N2	A	B	(*)	C	V1	(*)	V2	(*)		
32-125/1.1	50	95	125	165	16	4	32	75	100	140	14	252	112	140	124	119	80	32.5	212	6	190	213	407	431	-	-	-	PG 13.5	M20x1.5	24.1	24.1
32-160/1.5	50	95	125	165	16	4	32	75	100	140	14	292	132	160	124	119	80	42	200	6	210	254	407	431	-	-	-	PG 13.5	M20x1.5	27	27
32-160/2.2	50	95	125	165	16	4	32	75	100	140	14	292	132	160	124	119	80	42	200	6	210	254	432	431	-	-	-	PG 13.5	M20x1.5	28	28
32-200/3.0	50	95	125	165	16	4	32	75	100	140	14	340	160	180	124	124	80	39	205	8	220	296	471	471	-	-	-	PG 13.5	M20x1.5	35.1	35.1
32-200/4.0	50	95	125	165	16	4	32	75	100	140	14	340	160	180	141	141	80	39	205	8	220	296	494	494	-	-	-	PG 16	M20x1.5	38.2	38.2
32-200/5.5	50	95	125	165	16	4	32	75	100	140	14	340	160	180	150	150	80	39	205	8	220	296	519	519	-	PG 13.5	M20X1.5	PG 16	M25x1.5	52.2	52.2
32-200/7.5	50	95	125	165	16	4	32	75	100	140	14	340	160	180	150	150	80	39	205	8	220	296	-	539	275	-	PG 13.5	-	PG 16	-	60.1
40-125/1.5	65	115	145	185	16	4	40	80	110	150	14	252	112	140	124	119	80	32.5	212	6	190	213	407	431	-	-	-	PG 13.5	M20x1.5	24.6	24.6
40-125/2.2	65	115	145	185	16	4	40	80	110	150	14	252	112	140	124	119	80	32.5	212	6	190	213	432	431	-	-	-	PG 13.5	M20x1.5	26.1	26.1
40-160/3.0	65	115	145	185	16	4	40	80	110	150	14	292	132	160	124	124	80	42	200	6	210	254	471	471	-	-	-	PG 13.5	M20x1.5	26.6	26.6
40-160/4.0	65	115	145	185	16	4	40	80	110	150	14	292	132	160	141	141	80	42	200	6	210	254	494	491	-	-	-	PG 16	M20x1.5	40.8	40.8
40-200/5.5	65	115	145	185	16	4	40	80	110	150	14	340	160	180	150	150	100	39	205	8	220	296	539	539	-	PG 13.5	M20X1.5	PG 16	M25x1.5	52.5	52.5
40-200/7.5	65	115	145	185	16	4	40	80	110	150	14	340	160	180	150	150	100	39	205	8	220	296	-	559	275	-	PG 13.5	-	PG 16	-	59.3
40-200/11	65	115	145	185	16	4	40	80	110	150	14	340	160	180	178	178	100	39	205	8	220	296	-	595	359	-	PG 13.5	-	PG 21	-	69.6
50-125/2.2	65	115	145	185	16	4	50	95	125	165	16	292	132	160	124	119	100	42	200	6	210	254	452	451	-	-	-	PG 13.5	M20x1.5	32	32
50-125/3.0	65	115	145	185	16	4	50	95	125	165	16	292	132	160	124	124	100	42	200	6	210	254	491	491	-	-	-	PG 13.5	M20x1.5	30.9	30.9
50-125/4.0	65	115	145	185	16	4	50	95	125	165	16	292	132	160	141	141	100	42	200	6	210	254	514	514	-	-	-	PG 16	M20x1.5	40.9	40.9
50-160/5.5	65	115	145	185	16	4	50	95	125	165	16	340	160	180	150	150	100	39	205	8	220	296	539	539	-	PG 13.5	M20X1.5	PG 16	M25x1.5	46.5	46.5
50-160/7.5	65	115	145	185	16	4	50	95	125	165	16	340	160	180	150	150	100	39	205	8	220	296	-	559	275	-	PG 13.5	-	PG 16	-	58.6
50-200/9.2	65	115	145	185	16	4	50	95	125	165	16	360	160	200	178	178	100	39	205	8	220	296	-	595	359	-	PG 13.5	-	PG 21	-	63.9
50-200/11	65	115	145	185	16	4	50	95	125	165	16	360	160	200	178	178	100	39	205	8	220	296	-	595	359	-	PG 13.5	-	PG 21	-	69.6
65-125/4	80	134	160	200	18	8	65	115	145	185	16	340	160	180	141	141	100	42	200	6	210	254	514	514	-	-	-	PG 16	M20x1.5	37.7	37.7
65-125/5,5	80	134	160	200	18	8	65	115	145	185	16	340	160	180	150	150	100	42	200	6	210	254	539	539	-	PG 13.5	M20X1.5	PG 16	M25x1.5	48,7	48,7
65-125/7,5	80	134	160	200	18	8	65	115	145	185	16	340	160	180	150	150	100	42	200	6	210	254	-	559	275	-	PG 13.5	-	PG 16	-	52.1
65-160/7,5	80	134	160	200	18	8	65	115	145	185	16	360	160	200	150	150	100	39	205	8	220	296	-	559	275	-	PG 13.5	-	PG 16	-	55.3
65-160/9,2	80	134	160	200	18	8	65	115	145	185	16	360	160	200	178	178	100	39	205	8	220	296	-	595	359	-	PG 13.5	-	PG 21	-	61
65-160/11	80	134	160	200	18	8	65	115	145	185	16	360	160	200	178	178	100	39	205	8	220	296	-	595	359	-	PG 13.5	-	PG 21	-	67.4

(*) Only for IE3 Motors

DIMENSIONS AND WEIGHT

50Hz

Rev. V

PUMP 3LMZ 50-200/15, 65-160/15, 65-200

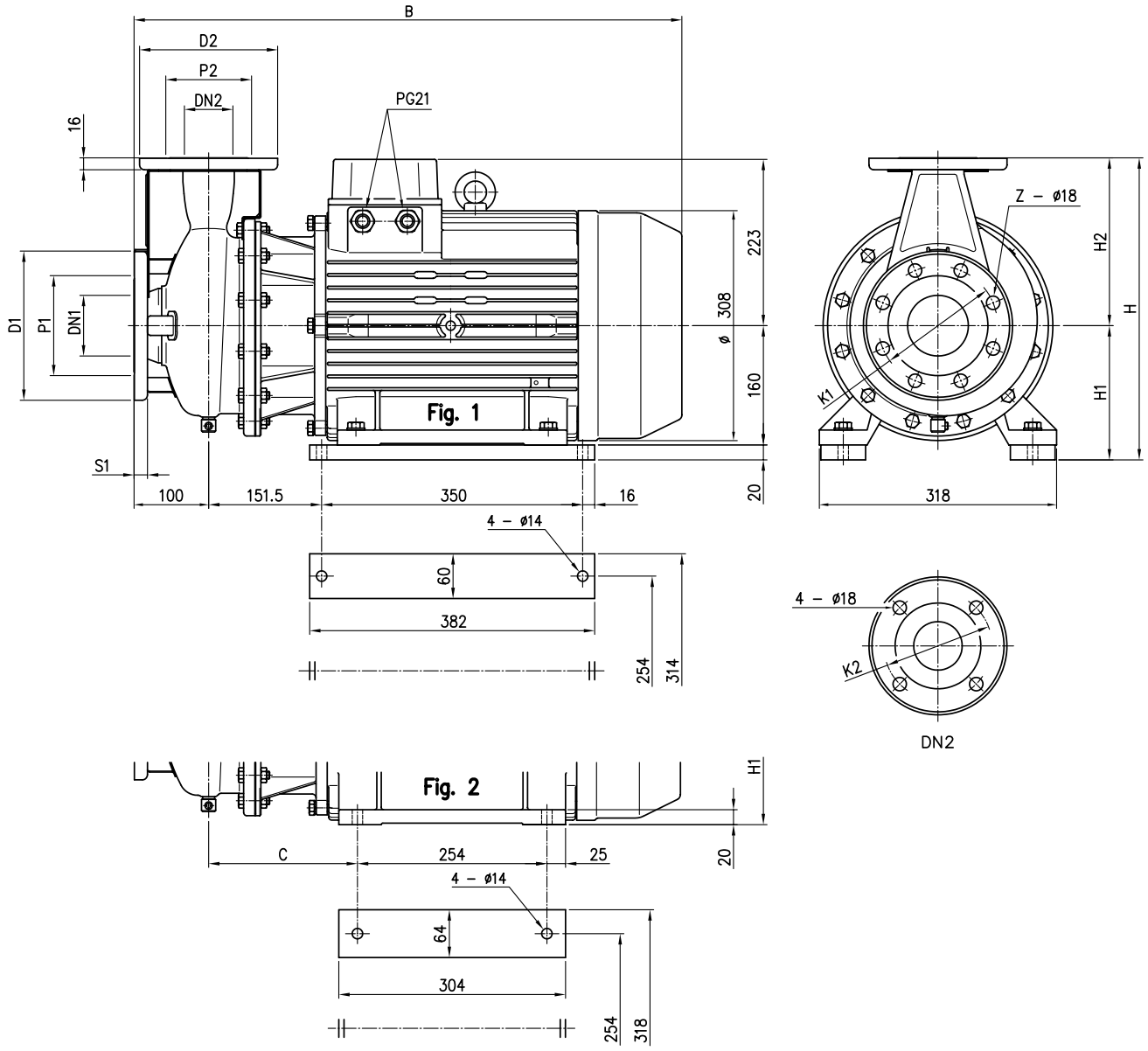

Model	Dimensions [mm]																Weight [kgf]
	Ø DN1	Ø P1	Ø K1	Ø D1	S1	Z	Ø DN2	Ø P2	Ø K2	Ø D2	Fig.	H	H1	H2	B	C	
50-200/15	65	115	145	185	16	4	50	95	125	165	2	360	160	200	723	190.5	105.1
65-160/15	80	134	160	200	18	8	65	115	145	185	2	360	160	200	732	199.5	107.1
65-200/15	80	134	160	200	18	8	65	115	145	185	1	405	180	225	732	-	110.1
65-200/18.5	80	134	160	200	18	8	65	115	145	185	1	405	180	225	732	-	125.3
65-200/22	80	134	160	200	18	8	65	115	145	185	1	405	180	225	732	-	136.1

DIMENSIONS AND WEIGHT

50Hz

Rev. V

PUMP 3LM 80-160/11

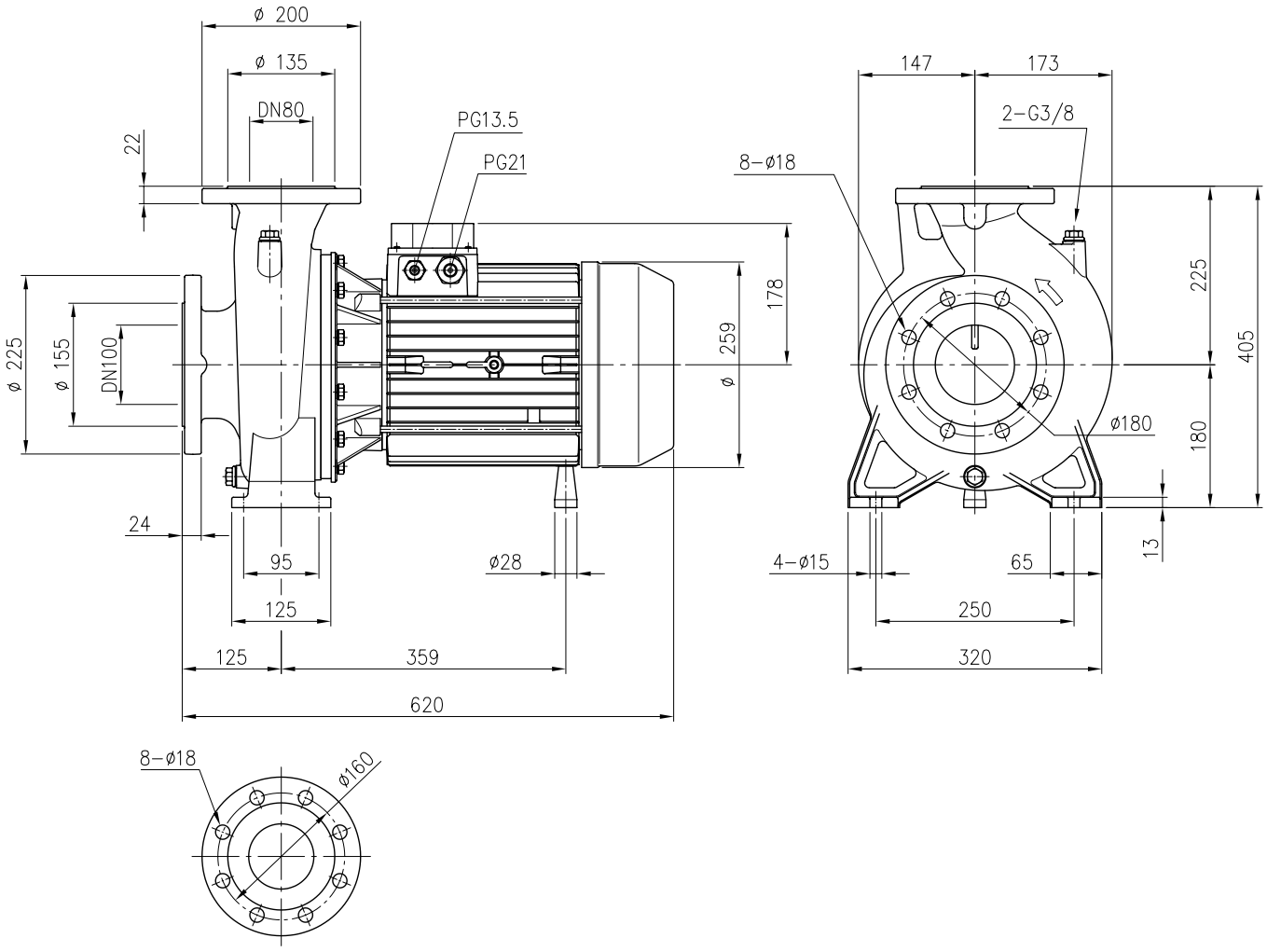

Weight: 100 kgf

DIMENSIONS AND WEIGHT

50Hz

Rev. V

PUMP 3LM 80-160/15R/15/18.5

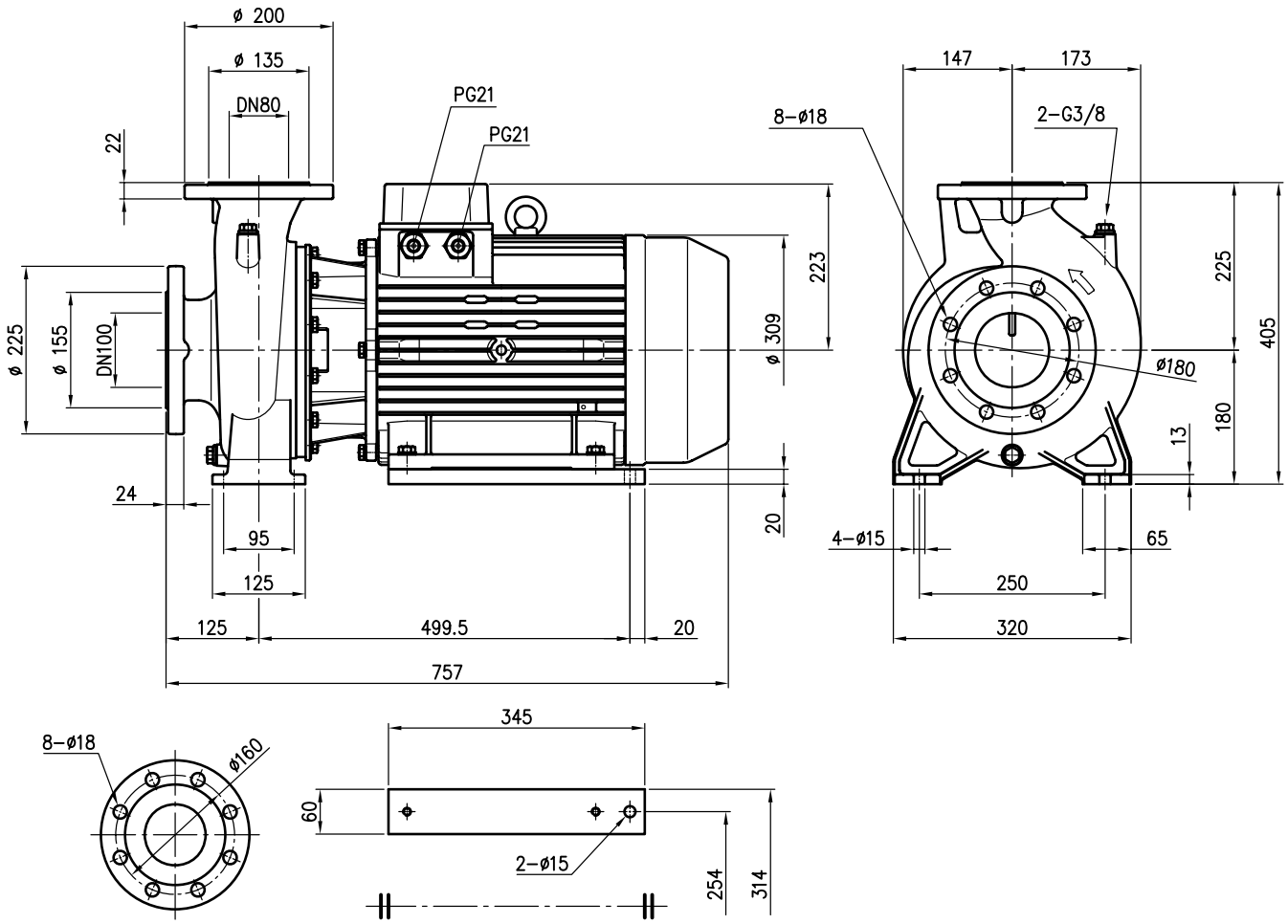

Weight:
80-160/15R : 130.1 kgf
80-160/15 : 131.1 kgf
80-160/18.5 : 145.3 kgf

DIMENSIONS AND WEIGHT

50Hz

Rev. V

PUMP 3(.)S 32, 40, 50

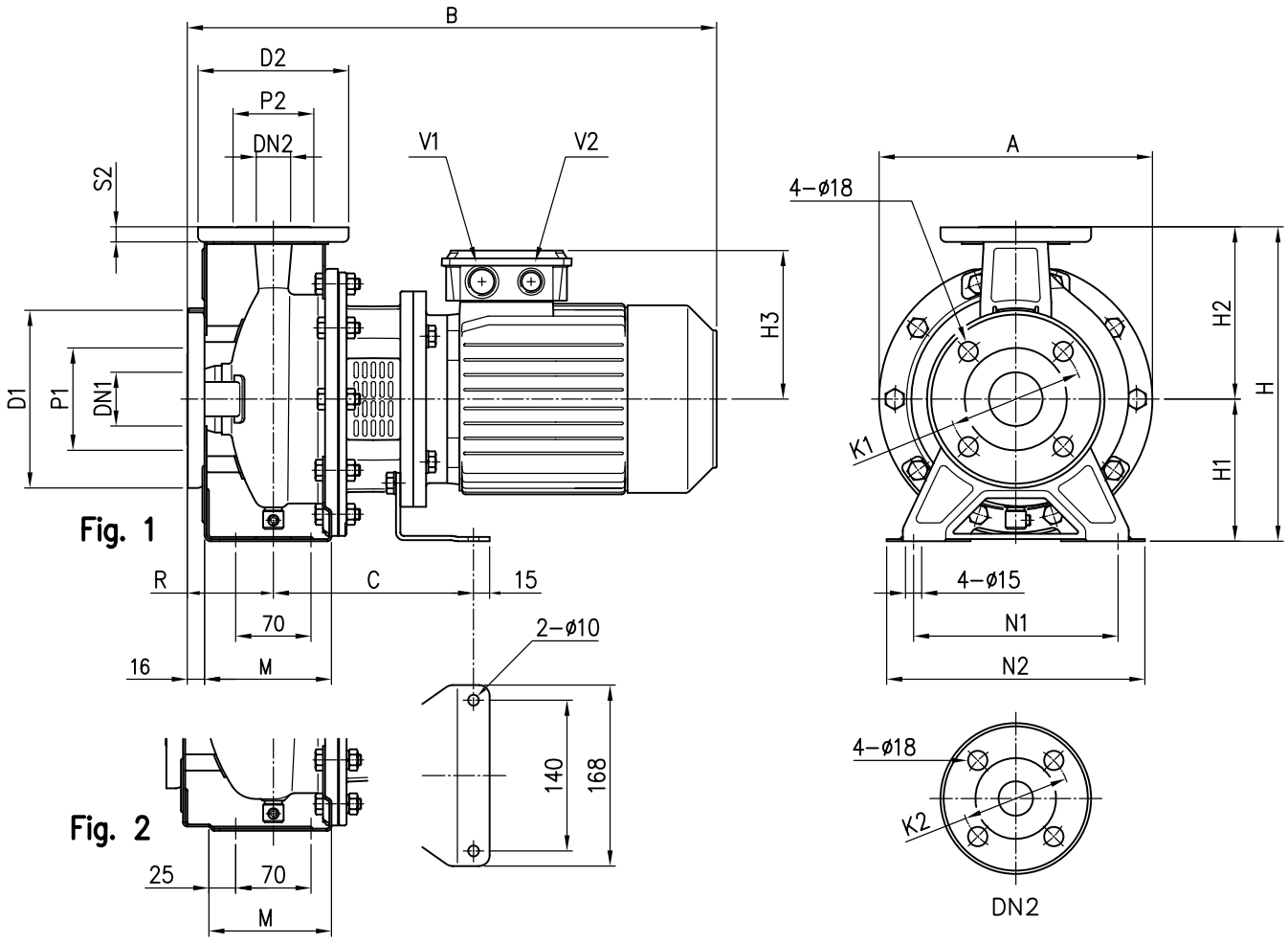

Model	Dimensions [mm]																						Weight [kgf]	
	Ø DN1	Ø P1	Ø K1	Ø D1	Ø DN2	Ø P2	Ø K2	Ø D2	S2	Fig.	H	H1	H2	H3	R	M	N1	N2	A	B	C	V1	V2		(*)
32-125/1.1	50	95	125	165	32	75	100	140	14	1	252	112	140	139	80	114	140	190	213	430	174	M25x1.5	M20x1.5	23.1	24.7
32-160/1.5	50	95	125	165	32	75	100	140	14	1	292	132	160	148	80	118	190	240	254	477	186	M25x1.5	M20x1.5	29.8	29.8
32-160/2.2	50	95	125	165	32	75	100	140	14	1	292	132	160	148	80	118	190	240	254	477	186	M25x1.5	M20x1.5	32.4	32.4
40-125/1.5	65	115	145	185	40	80	110	150	14	1	252	112	140	148	80	114	160	210	213	477	186	M25x1.5	M20x1.5	26.5	26.5
40-125/2.2	65	115	145	185	40	80	110	150	14	1	252	112	140	148	80	114	160	210	213	477	186	M25x1.5	M20x1.5	29.6	29.6
50-125/2.2	65	115	145	185	50	95	125	165	16	2	292	132	160	148	100	114	190	240	254	497	186	M25x1.5	M20x1.5	32.9	32.9

(*) Only for IE3 Motors

DIMENSIONS AND WEIGHT

50Hz

Rev. V

PUMP 3(.)S 32, 65

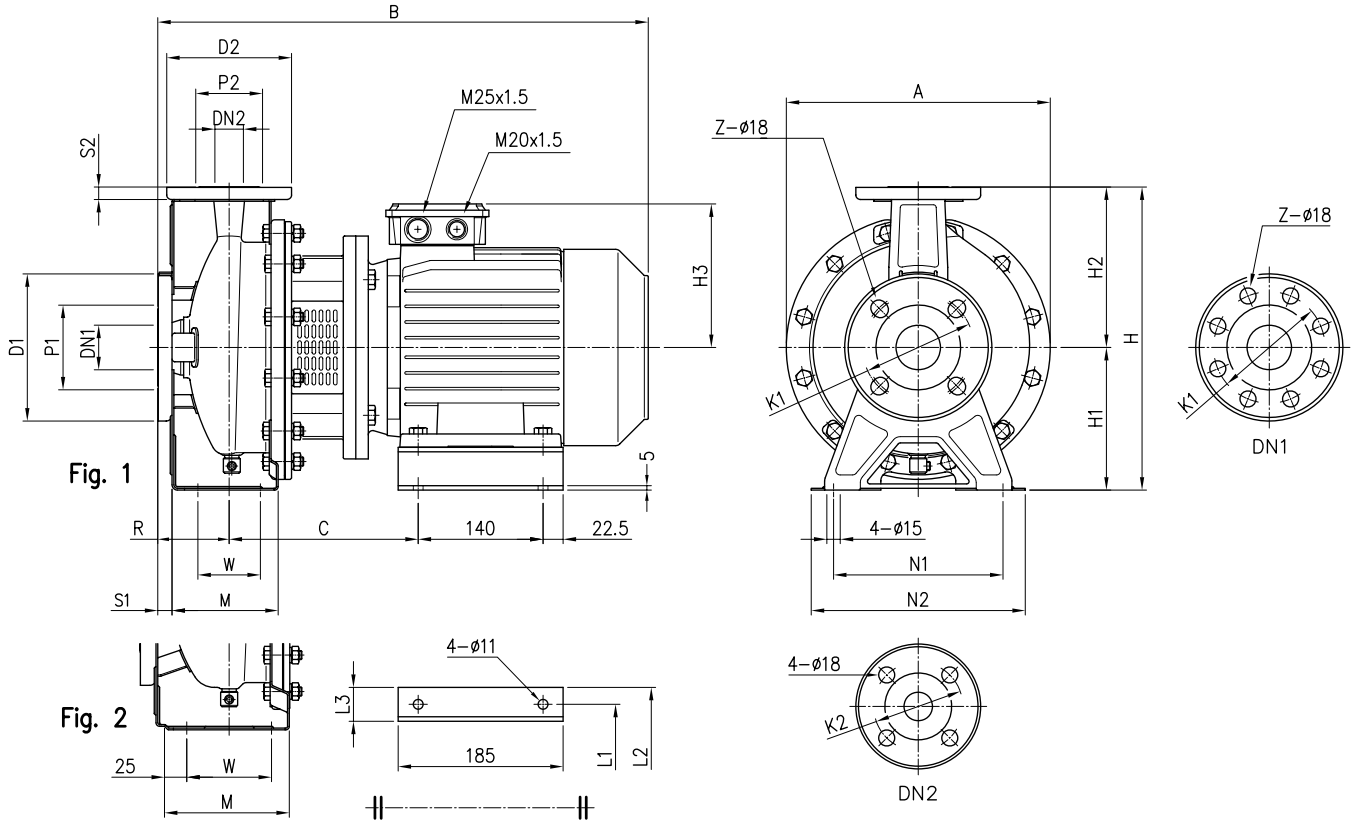

Model	Dimensions [mm]																											Weight [kgf]	
	ø DN1	ø P1	ø K1	ø D1	S1	Z [1]	Z [2]	ø DN2	ø P2	ø K2	ø D2	S2	Fig.	H	H1	H2	H3	R	W	M	N1	N2	A	B	C	L1	L2	L3		(*)
32-200/3.0	50	95	125	165	16	4	-	32	75	100	140	14	1	340	160	180	155	80	70	119	190	240	296	528	205	160	202	42	46.9	46.9
32-200/4.0	50	95	125	165	16	4	-	32	75	100	140	14	1	340	160	180	171	80	70	119	190	240	296	550	212	190	228	38	49	49
65-125/4.0	80	134	160	200	18	8	4	65	115	145	185	16	2	340	160	180	171	100	95	140	212	280	254	570	212	190	228	38	50.1	50.1

[1] Standard [2] On request (*) Only for IE3 Motors

DIMENSIONS AND WEIGHT

50Hz

Rev. V

PUMP 3(.)S 32, 40, 50, 65

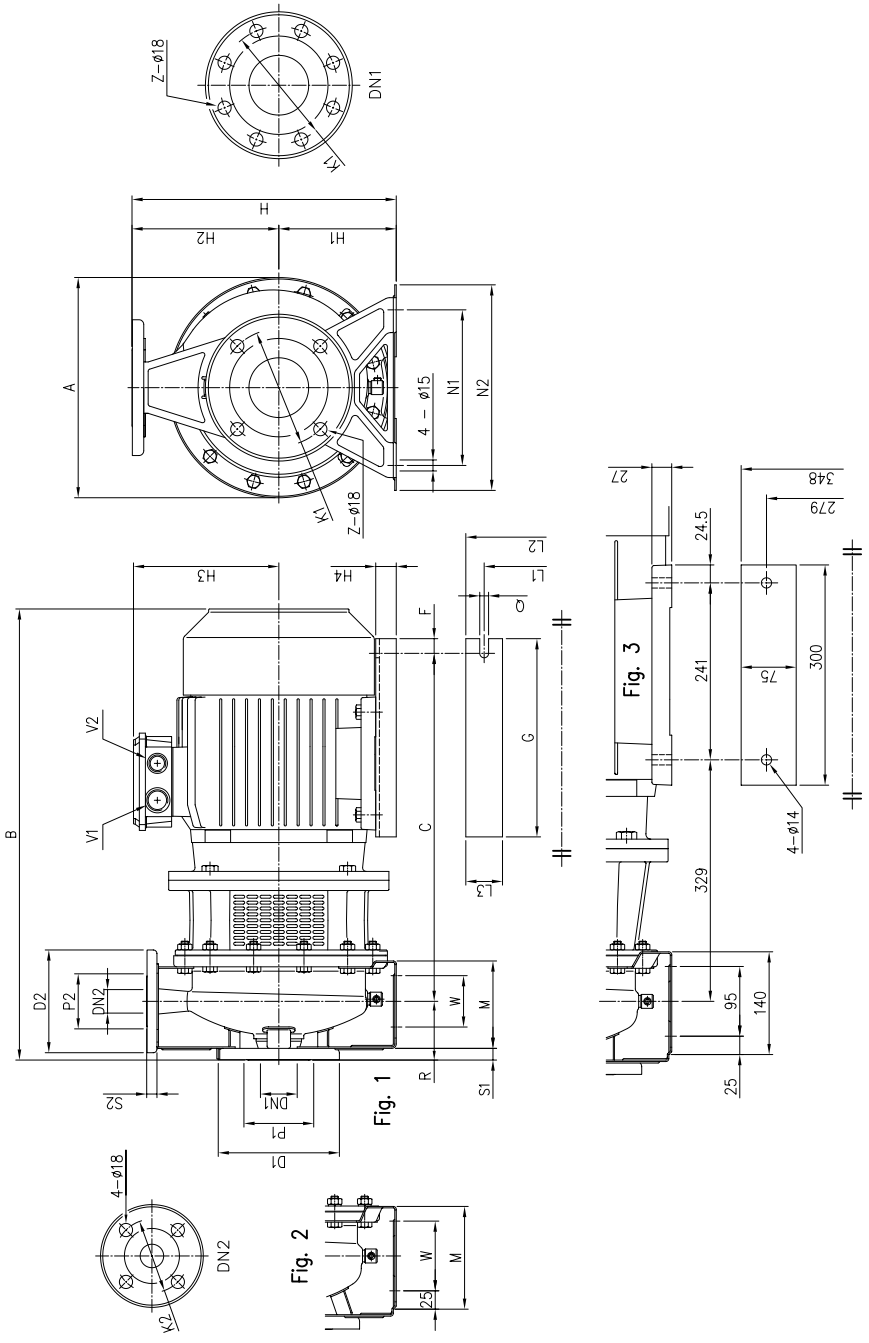

Model	Ø DN1	Ø P1	Ø K1	Ø D1	S1	Z [1]	Z [2]	Ø DN2	Ø P2	Ø K2	Ø D2	S2	Fig.	H	H1	H2	H3	H4	R	W	M	N1	N2	A	B	C	F	G	Q	L1	L2	L3	V1	V2	Weight [kgf] (*)
32-200/5.5	50	95	125	165	16	4	-	32	75	100	140	14	1	340	160	180	198	28	80	70	119	190	240	300	607	479	15	270	12	216	266	50	M32x1.5	M32x1.5	71.8	71.8
32-200/7.5	50	95	125	165	16	4	-	32	75	100	140	14	1	340	160	180	198	28	80	70	119	190	240	300	607	479	15	270	12	216	266	50	M32x1.5	M32x1.5	-	87
40-160/3.0	65	115	145	185	16	4	-	40	80	110	150	14	1	292	132	160	155	32	80	70	118	190	240	254	528	388	15	220	12	160	200	40	M25x1.5	M20x1.5	42.5	42.5
40-160/4.0	65	115	145	185	16	4	-	40	80	110	150	14	1	292	132	160	171	20	80	70	118	190	240	254	550	395	15	220	12	190	240	50	M25x1.5	M20x1.5	44.6	44.6
40-200/5.5	65	115	145	185	16	4	-	40	80	110	150	14	2	340	160	180	198	28	100	70	115	212	265	300	627	479	15	270	12	216	266	50	M32x1.5	M32x1.5	72.2	72.2
40-200/7.5	65	115	145	185	16	4	-	40	80	110	150	14	2	340	160	180	198	28	100	70	115	212	265	300	627	479	15	270	12	216	266	50	M32x1.5	M32x1.5	-	82
50-125/3.0	65	115	145	185	16	4	-	50	95	125	165	16	2	292	132	160	155	32	100	70	114	190	240	254	548	388	15	220	12	160	200	40	M25x1.5	M20x1.5	35.5	35.5
50-125/4.0	65	115	145	185	16	4	-	50	95	125	165	16	2	292	132	160	171	20	100	70	114	190	240	254	570	395	15	220	12	190	240	50	M25x1.5	M20x1.5	45.6	45.6
50-160/5.5	65	115	145	185	16	4	-	50	95	125	165	16	2	340	160	180	198	28	100	70	115	212	265	300	627	479	15	270	12	216	266	50	M32x1.5	M32x1.5	63.8	63.8
50-160/7.5	65	115	145	185	16	4	-	50	95	125	165	16	2	340	160	180	198	28	100	70	115	212	265	300	627	479	15	270	12	216	266	50	M32x1.5	M32x1.5	-	91
50-200/9.2	65	115	145	185	16	4	-	50	95	125	165	16	2	360	160	200	198	28	100	70	115	212	265	300	667	479	15	270	12	216	266	50	M32x1.5	M32x1.5	-	90.7
65-125/5.5	80	134	160	200	18	8	4	65	115	145	185	16	2	340	160	180	198	28	100	95	140	212	280	300	627	479	15	270	12	216	266	50	M32x1.5	M32x1.5	60	60
65-125/7.5	80	134	160	200	18	8	4	65	115	145	185	16	2	340	160	180	198	28	100	95	140	212	280	300	627	479	15	270	12	216	266	50	M32x1.5	M32x1.5	-	79.4
65-160/7.5	80	134	160	200	18	8	4	65	115	145	185	16	2	360	160	200	198	28	100	95	140	212	280	300	627	479	15	270	12	216	266	50	M32x1.5	M32x1.5	-	82.4
65-160/9.2	80	134	160	200	18	8	4	65	115	145	185	16	2	360	160	200	198	28	100	95	140	212	280	300	667	479	15	270	12	216	266	50	M32x1.5	M32x1.5	-	88
65-200/15	80	134	160	200	18	8	4	65	115	145	185	16	2	405	180	225	238	20	100	95	140	250	320	350	806	621	20	350	14	254	314	60	M40x1.5	M40x1.5	-	138
65-200/18.5	80	134	160	200	18	8	4	65	115	145	185	16	2	405	180	225	238	20	100	95	140	250	320	350	850	621	20	350	14	254	314	60	M40x1.5	M40x1.5	-	137.2
65-200/22	80	134	160	200	18	8	4	65	115	145	185	16	3	405	180	225	268	-	100	-	-	250	320	350	885	-	-	-	-	-	-	-	M32x1.5	M32x1.5	-	175

(*) Only for IE3 Motors [1] Standard [2] On request

DIMENSIONS AND WEIGHT

50Hz

Rev. V

PUMP 3(.)S 40, 50, 65

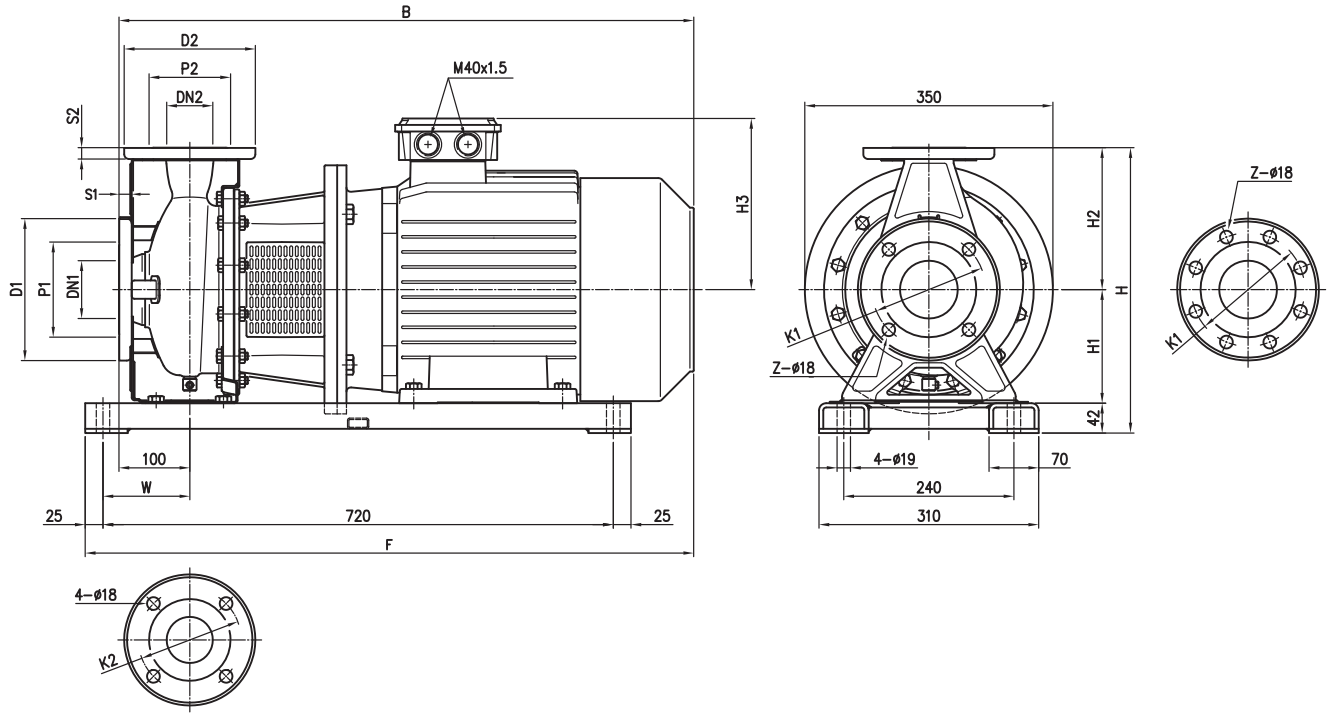

Pump type	Dimensions [mm]																			Weight [kgf]
	Ø DN1	Ø P1	Ø K1	Ø D1	S1	Z [1]	Z [2]	Ø DN2	Ø P2	Ø K2	Ø D2	S2	H	H1	H2	H3	W	B	F	
40-200/11	65	115	145	185	16	4	-	40	80	110	150	14	382	160	180	238	110	796	831	117.8
50-200/11	65	115	145	185	16	4	-	50	95	125	165	16	402	160	200	238	110	796	831	117.8
50-200/15	65	115	145	185	16	4	-	50	95	125	165	16	402	160	200	238	110	796	831	147.9
65-160/11	80	134	160	200	18	8	4	65	115	145	185	16	402	160	200	238	122.5	796	844	86.8
65-160/15	80	134	160	200	18	8	4	65	115	145	185	16	402	160	200	238	122.5	806	854	120.9

[1] Standard [2] On request

DIMENSIONS AND WEIGHT

50Hz

Rev. V

PUMP 3LSZ 32-125/160, 32-200/3/4, 50-125/2.2, 65-125/4

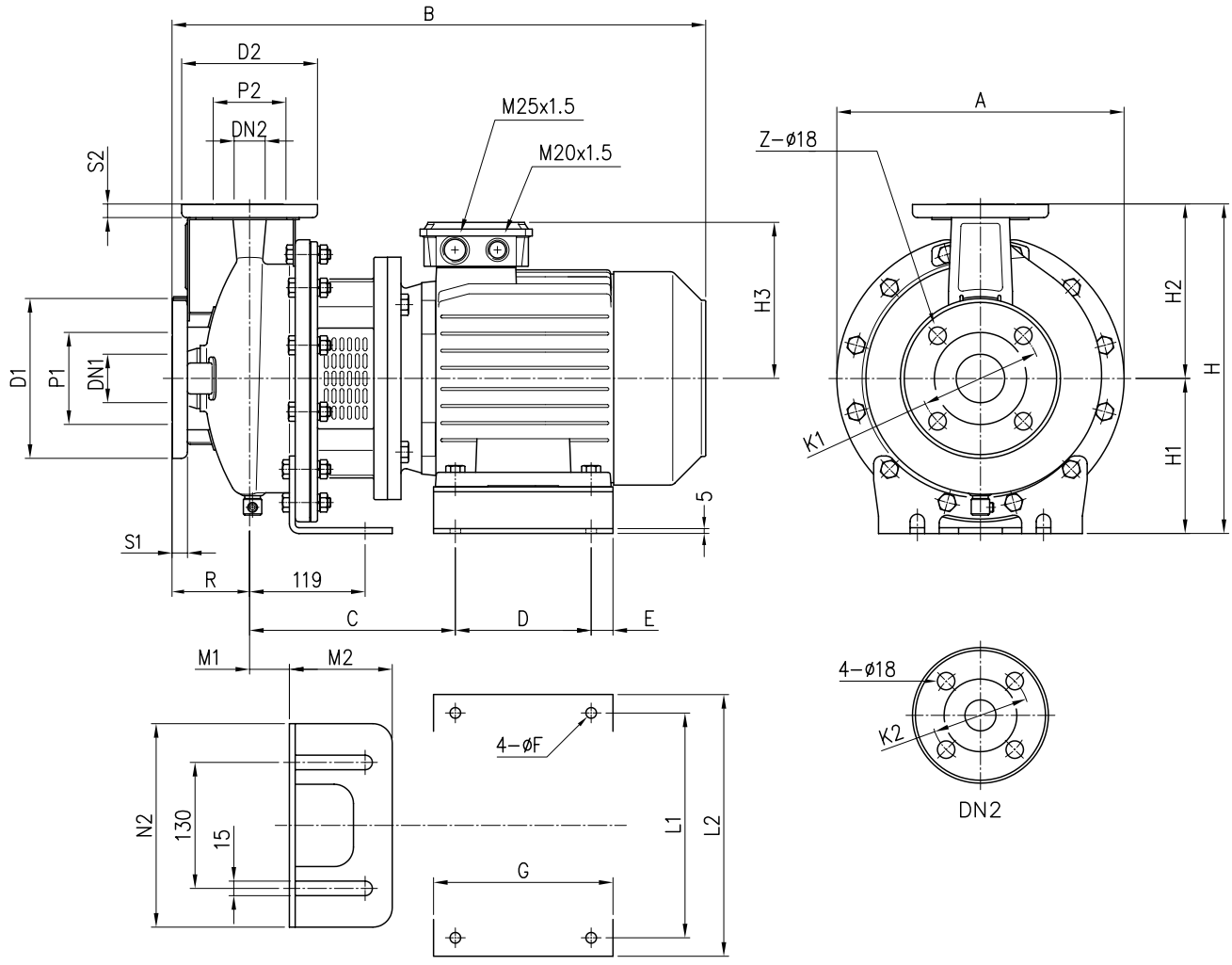

Model	Dimensions [mm]																											Weight [kgf]	
	Ø DN1	Ø P1	Ø K1	Ø D1	S1	Z	Ø DN2	Ø P2	Ø K2	Ø D2	S2	H	H1	H2	H3	R	A	B	C	D	E	Ø F	G	L1	L2	M1	M2	N2		(*)
32-125/1.1	50	95	125	165	16	4	32	75	100	140	14	252	112	140	139	80	213	430	168	100	15	9	130	205	225	32.5	117	190	23.1	24.7
32-160/1.5	50	95	125	165	16	4	32	75	100	140	14	292	132	160	148	80	254	477	186	125	25	9	170	210	230	42	105	210	29.8	29.8
32-160/2.2	50	95	125	165	16	4	32	75	100	140	14	292	132	160	148	80	254	477	186	125	25	9	170	210	230	42	105	210	32.4	32.4
32-200/3.0	50	95	125	165	16	4	32	75	100	140	14	340	160	180	155	80	296	528	205	140	22.5	11	185	160	202	41	106	210	46.9	46.9
32-200/4.0	50	95	125	165	16	4	32	75	100	140	14	340	160	180	171	80	296	550	212	140	22.5	11	185	190	228	41	106	210	49	49
50-125/2.2	65	115	145	185	16	4	50	95	125	165	16	292	132	160	148	100	254	497	186	125	25	9	170	210	230	42	105	210	32.9	32.9
65-125/4.0	80	134	160	200	18	8	65	115	145	185	16	340	160	180	171	100	254	570	212	140	22.5	11	185	190	228	42	105	210	50.1	50.1

(*) Only for IE3 Motors

DIMENSIONS AND WEIGHT

50Hz

Rev. V

PUMP 3LSZ 32-200/5.5/7.5, 40-125/160, 40-200/5.5/7.5, 50-125/3/4, 50-160 50-200/9.2, 65-125/5.5/7.5, 65-160/7.5/9.2

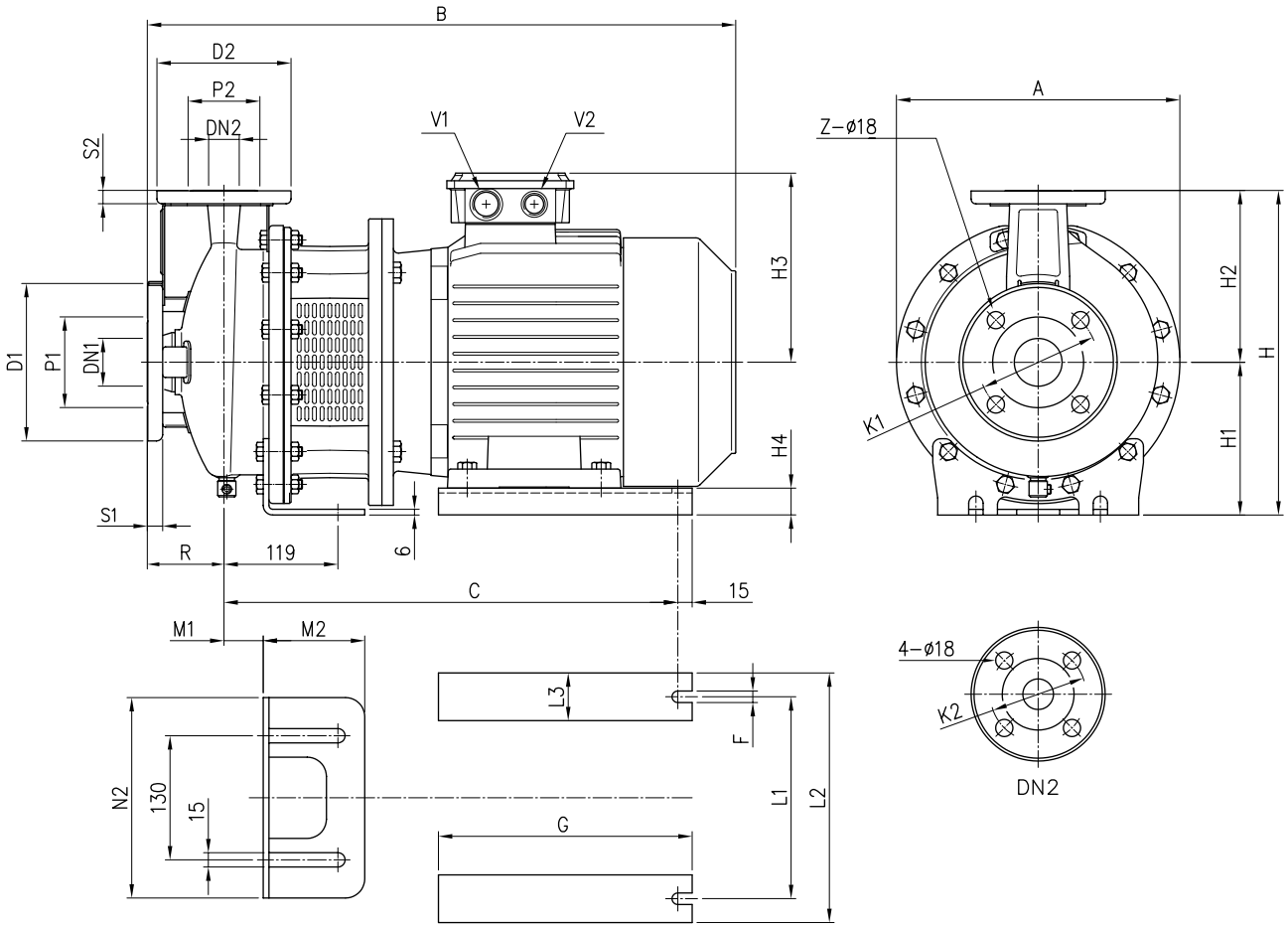

Model	Dimensions [mm]																											Weight [kgf]	
	Ø DN1	Ø P1	Ø K1	Ø D1	S1	Z	Ø DN2	Ø P2	Ø K2	Ø D2	S2	H	H1	H2	H3	H4	R	A	B	C	F	G	L1	L2	L3	M1	M2	N2		(*)
32-200/5.5	50	95	125	165	16	4	32	75	100	140	14	340	160	180	198	28	80	300	607	479	12	270	216	266	50	41	106	210	71.8	71.8
32-200/7.5	50	95	125	165	16	4	32	75	100	140	14	340	160	180	198	28	80	300	607	479	12	270	216	266	50	41	106	210	-	87
40-125/1.5	65	115	145	185	16	4	40	80	110	150	14	252	112	140	148	22	80	213	477	342	10	186	140	185	45	32,5	117	190	26.5	26.5
40-125/2.2	65	115	145	185	16	4	40	80	110	150	14	252	112	140	148	22	80	213	477	342	10	186	140	185	40	32,5	117	190	29.5	29.5
40-160/3.0	65	115	145	185	16	4	40	80	110	150	14	292	132	160	155	32	80	254	528	387,5	12	220	160	200	50	42	105	210	42.5	42.5
40-160/4.0	65	115	145	185	16	4	40	80	110	150	14	292	132	160	171	20	80	254	550	394,5	12	220	190	240	50	42	105	210	44.6	44.6
40-200/5.5	65	115	145	185	16	4	40	80	110	150	14	340	160	180	198	28	100	300	627	479	12	270	216	266	50	41	106	210	72.2	72.2
40-200/7.5	65	115	145	185	16	4	40	80	110	150	14	340	160	180	198	28	100	300	627	479	12	270	216	266	40	41	106	210	-	82
50-125/3.0	65	115	145	185	16	4	50	95	125	165	16	292	132	160	155	32	100	254	548	387,5	12	220	160	200	50	42	105	210	35.5	35.5
50-125/4.0	65	115	145	185	16	4	50	95	125	165	16	292	132	160	171	20	100	254	570	394,5	12	220	190	240	50	42	105	210	45.6	45.6
50-160/5.5	65	115	145	185	16	4	50	95	125	165	16	340	160	180	198	28	100	300	627	479	12	270	216	266	50	41	106	210	63.8	63.8
50-160/7.5	65	115	145	185	16	4	50	95	125	165	16	340	160	180	198	28	100	300	627	479	12	270	216	266	50	41	106	210	-	91
50-200/9.2	65	115	145	185	16	4	50	95	125	165	16	360	160	200	198	28	100	300	667	479	12	270	216	266	50	41	106	210	-	90.7
65-125/5.5	80	134	160	200	18	8	65	115	145	185	16	340	160	180	198	28	100	300	627	479	12	270	216	266	50	42	105	210	60	60
65-125/7.5	80	134	160	200	18	8	65	115	145	185	16	340	160	180	198	28	100	300	627	479	12	270	216	266	50	42	105	210	-	79.4
65-160/7.5	80	134	160	200	18	8	65	115	145	185	16	360	160	200	198	28	100	300	627	479	12	270	216	266	50	41	106	210	-	82.4
65-160/9.2	80	134	160	200	18	8	65	115	145	185	16	360	160	200	198	28	100	300	667	479	12	270	216	266	50	41	106	210	-	88

(*) Only for IE3 Motors

DIMENSIONS AND WEIGHT

50Hz

Rev. V

PUMP 3LSZ 40-200/11, 50-20011/15, 65-160/11/15, 65-200

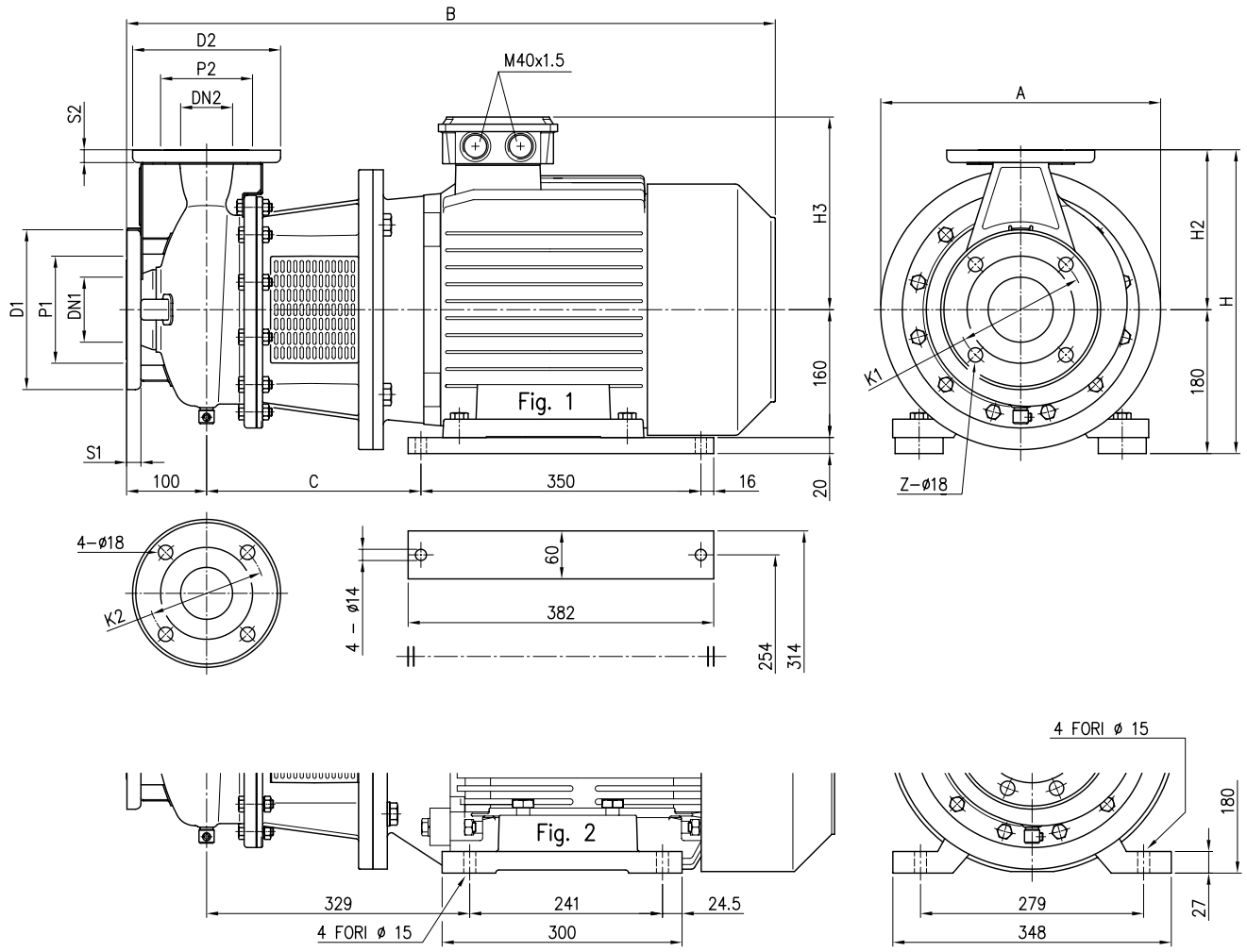

Model	Dimensions [mm]																		Weight [kgf]
	Ø DN1	Ø P1	Ø K1	Ø D1	S1	Z	Ø DN2	Ø P2	Ø K2	Ø D2	S2	Fig.	H	H2	H3	A	B	C	
40-200/11	65	115	145	185	16	4	40	80	110	150	14	1	360	180	238	350	796	258	117.8
50-200/11	65	115	145	185	16	4	50	95	125	165	16	1	380	200	238	350	796	258	117.8
50-200/15	65	115	145	185	16	4	50	95	125	165	16	1	380	200	238	350	796	258	147.9
65-160/11	80	134	160	200	18	8	65	115	145	185	16	1	380	200	238	350	796	258	86.8
65-160/15	80	134	160	200	18	8	65	115	145	185	16	1	380	200	238	350	806	268	120.9
65-200/15	80	134	160	200	18	8	65	115	145	185	16	1	405	225	238	350	806	268	138
65-200/18.5	80	134	160	200	18	8	65	115	145	185	16	1	405	225	238	350	850	268	137.2
65-200/22	80	134	160	200	18	8	65	115	145	185	16	2	405	225	268	360	885	-	175

DIMENSIONS AND WEIGHT

50Hz

Rev. V

PUMP 3LS 80-160

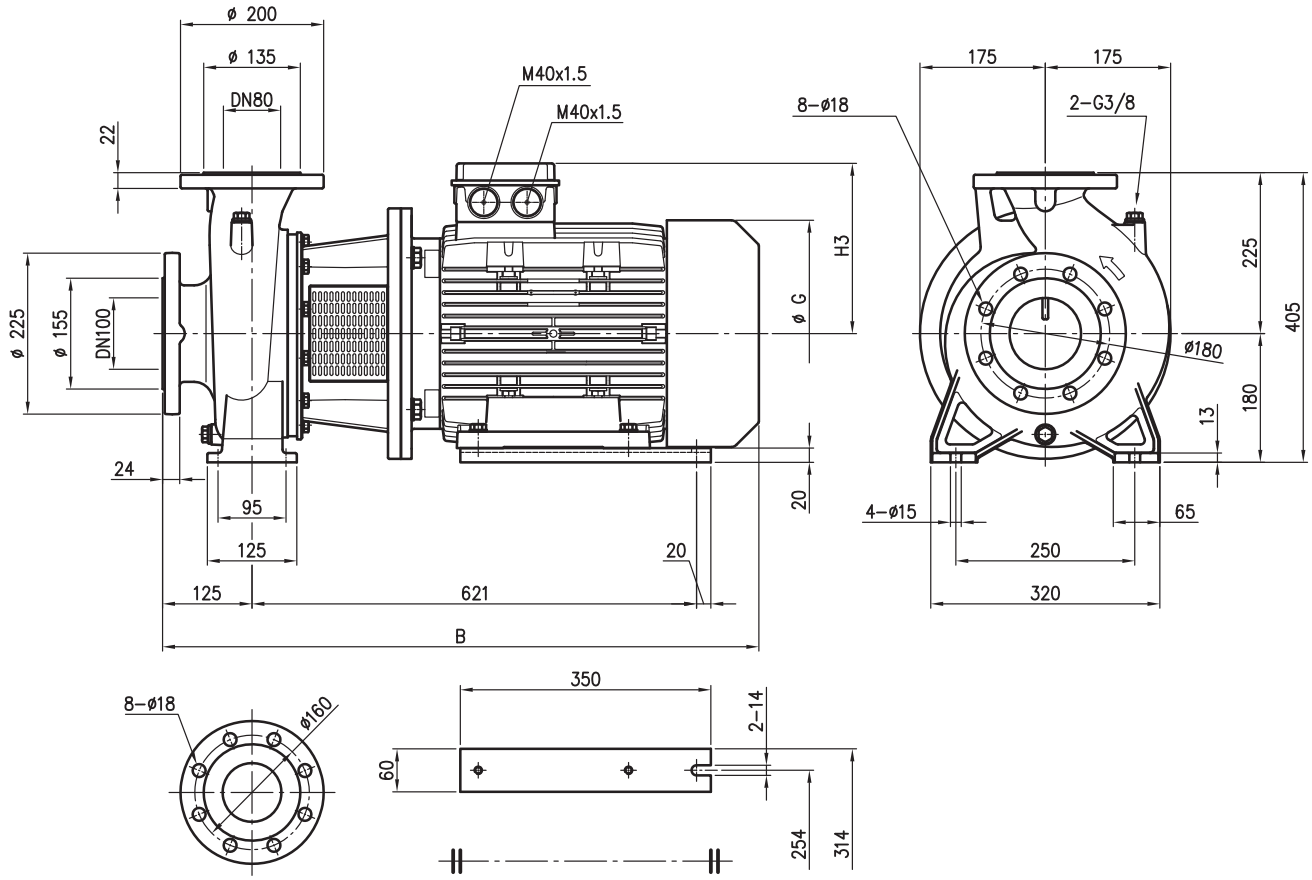

Pump type	B	H3	G	Weight [kgf]
80-160/11	831	238	317	145.8
80-160/15R	831	238	317	157
80-160/15	831	238	317	157
80-160/18.5	875	238	317	151.2

DIMENSIONS AND WEIGHT

50Hz

Rev. V

PUMP 3LS 65-250, 80-200, 80-250/37

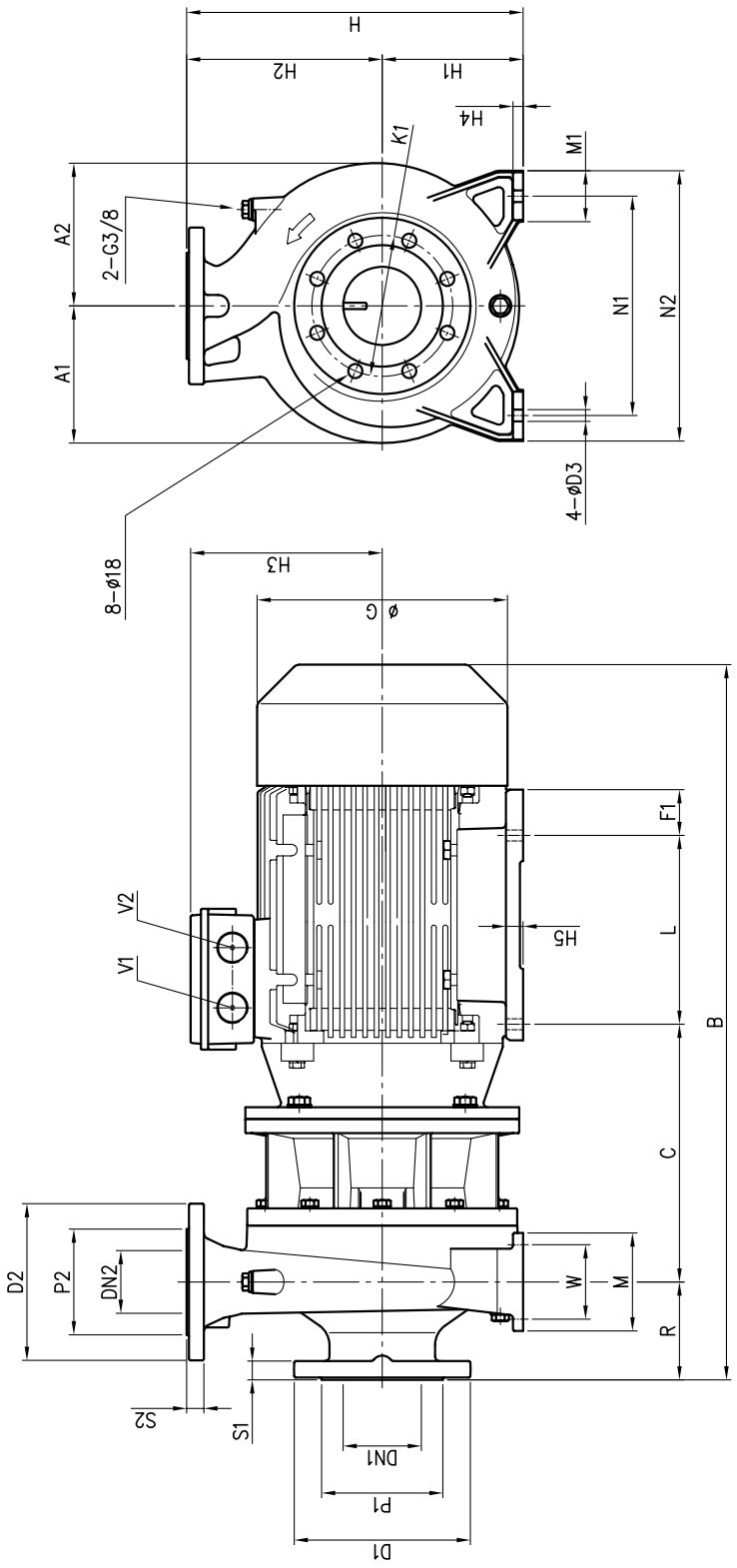

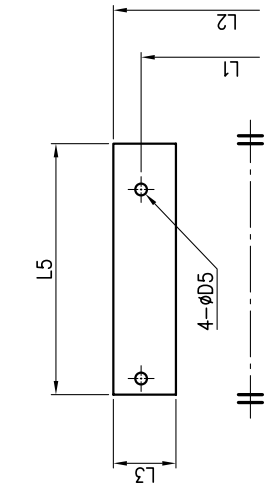

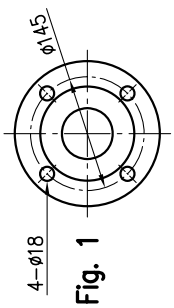

Fig. 1

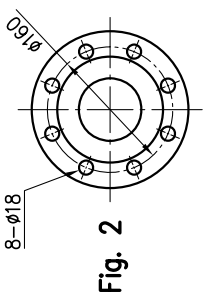

Fig. 2

Pump type	Dimensions [mm]																																	Weight [kgf]
	DN1	P1	K1	D1	S1	DN2	P2	D2	S2	H	H1	H2	H3	H4	H5	R	W	N1	N2	M	M1	L	L1	L2	L3	L5	A1	A2	B	C	F1	G	D3	D5	V1	V2	
65-250/30	80	135	160	200	22	65 Fig. 1	120	185	20	450	200	250	300	15	25	100	120	280	360	160	80	305	318	388	80	358	200	200	966	341	21.5	399	19	17	M40x1.5	M40x1.5	303
65-250/37	80	135	160	200	22	65 Fig. 1	120	185	20	450	200	250	300	15	25	100	120	280	360	160	80	305	318	388	80	358	200	200	966	341	21.5	399	19	17	M40x1.5	M40x1.5	320
80-200/22	100	155	180	225	24	80 Fig. 2	135	200	22	430	180	250	268	13	27	125	95	280	345	125	65	241	279	348	75	300	175	182	910	329	24.5	360	15	14	M32x1.5	M32x1.5	207
80-250/37	100	155	180	225	24	80 Fig. 2	135	200	22	480	200	280	300	15	25	125	120	315	400	160	80	305	318	388	80	358	200	200	1019	369	21.5	399	19	17	M40x1.5	M40x1.5	335

DIMENSIONS AND WEIGHT

50Hz

Rev. V

PUMP 3LS 80-200/30/37, 80-250/45

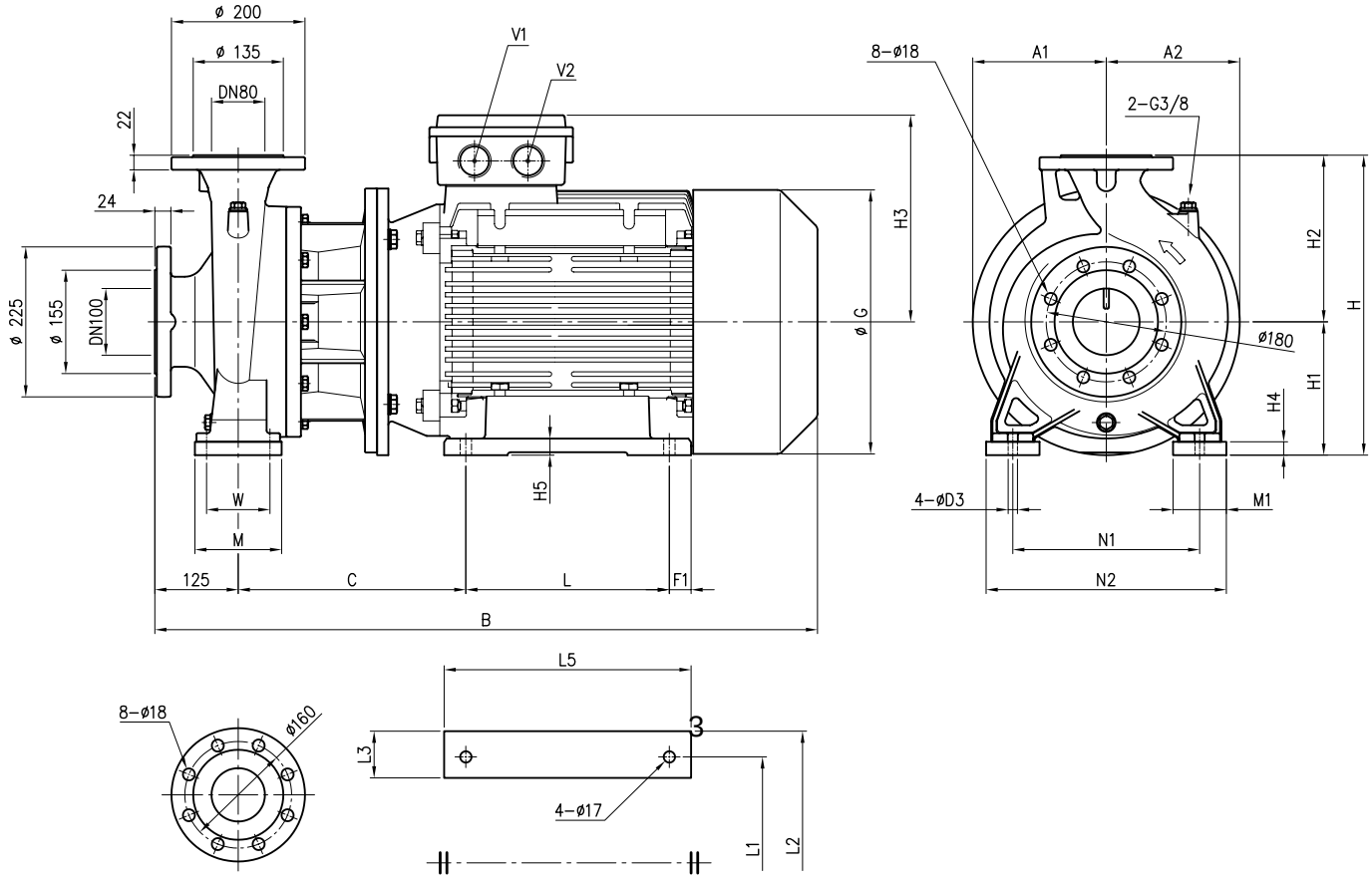

Pump type	Dimensions [mm]																								Weight [kgf]
	H	H1	H2	H3	H4	H5	W	N1	N2	M	M1	L	L1	L2	L3	L5	A1	A2	B	C	F1	G	D3	V1	V2	
80-200/30	450	200	250	300	20	25	95	280	360	130	80	305	318	388	80	358	200	200	991	341	21.5	399	14	M40x1.5	M40x1.5	306
80-200/37	450	200	250	300	20	25	95	280	360	130	80	305	318	388	80	358	200	200	991	341	21.5	399	14	M40x1.5	M40x1.5	325
80-250/45	505	225	280	335	25	28	120	315	415	165	100	311	356	436	80	386	225	225	1060	385	37.5	465	18	M50x1.5	M50x1.5	401

DIMENSIONS AND WEIGHT

50Hz

Rev. V

PUMP 3LS 80-250/55

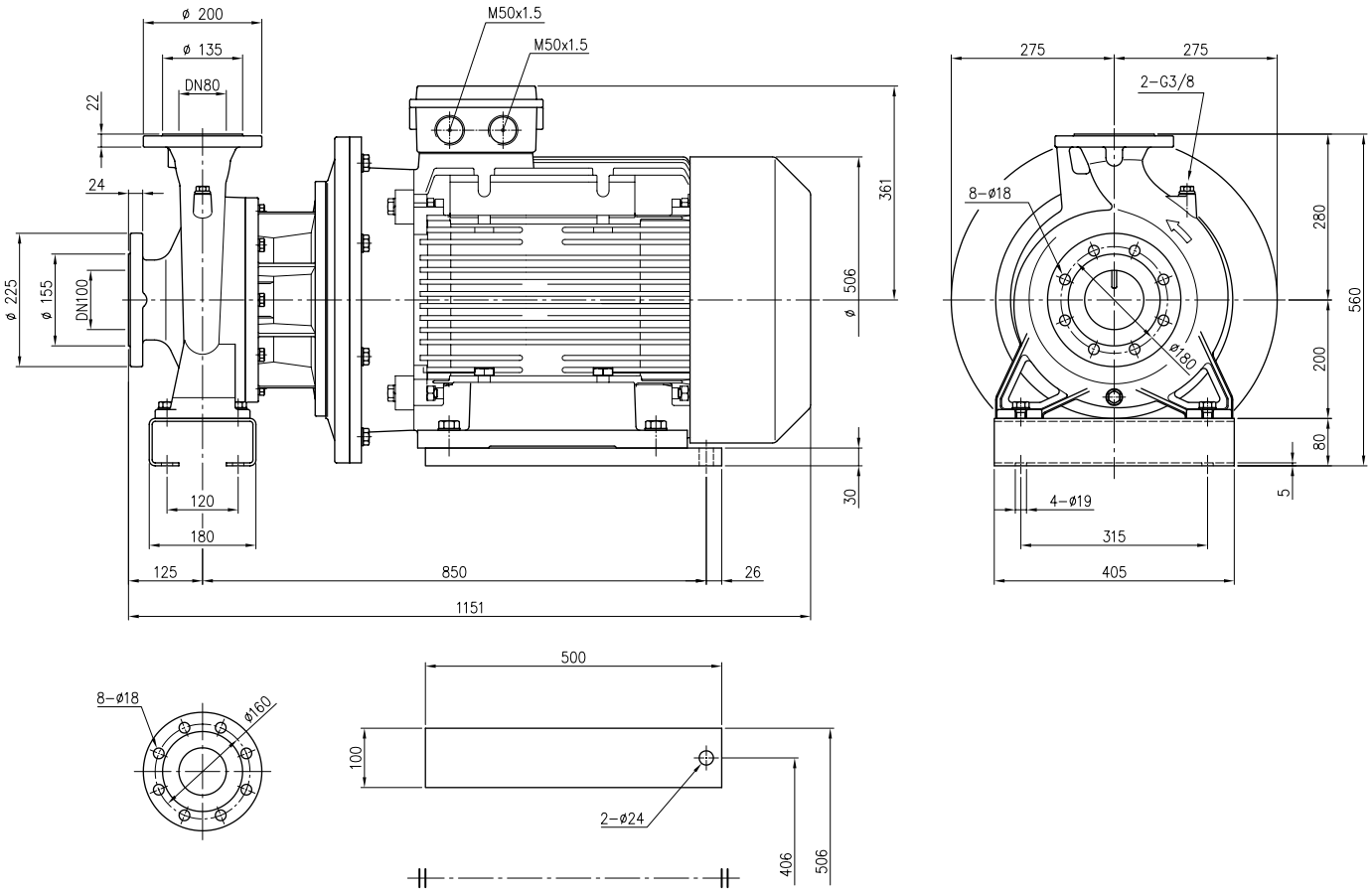

Weight: 489 kgf

DIMENSIONS AND WEIGHT

50Hz

Rev. V

PUMP 3(.)P 32, 40, 50, 65

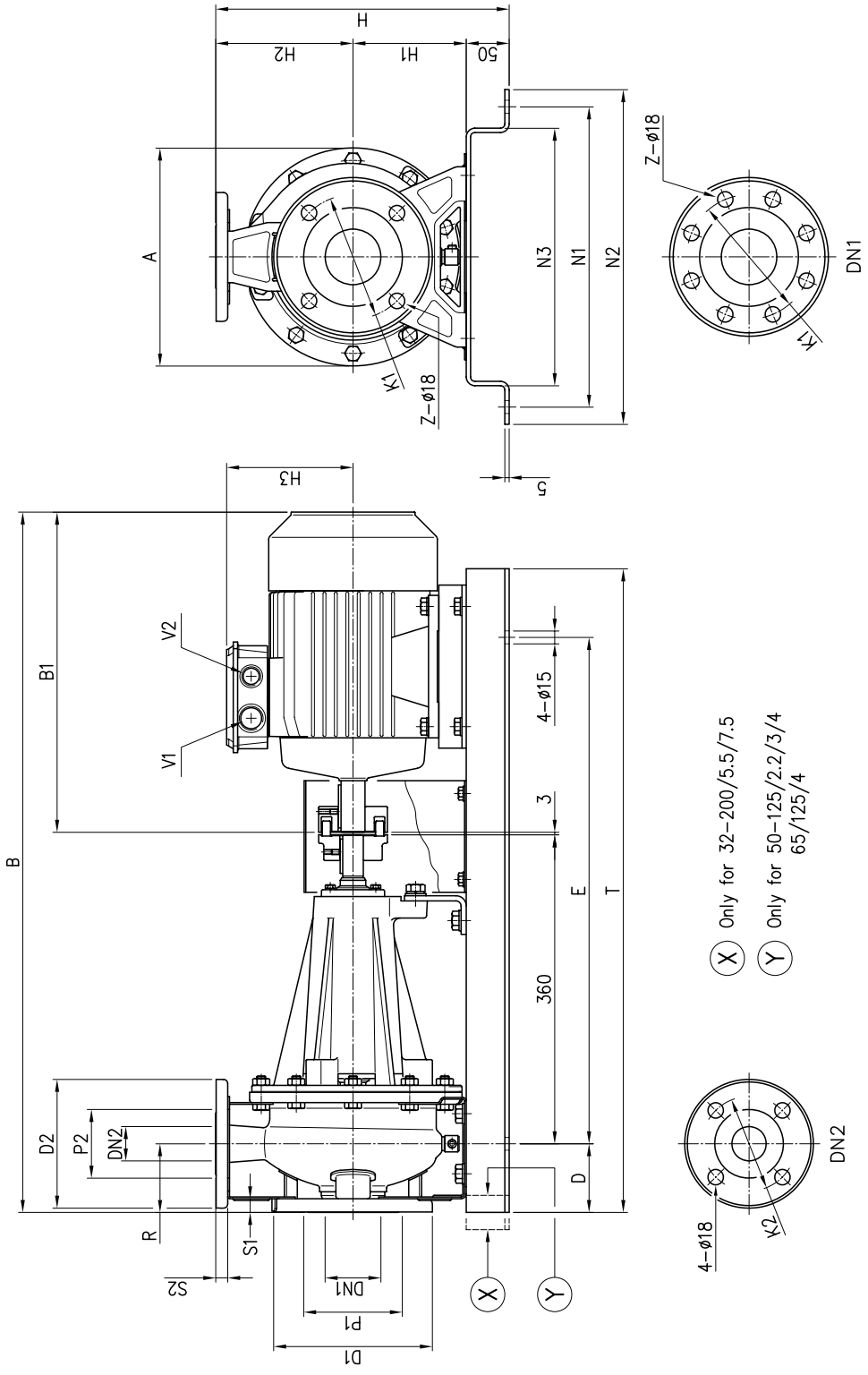

For dimensions see table pag. 418

DIMENSIONS AND WEIGHT

50Hz

Rev. V

PUMP 3(.)P 32, 40, 50, 65

Model	Dimensions [mm]																										Weight [kgf]	
	Ø DN1	Ø P1	Ø K1	Ø D1	S1	Z [1]	Z [2]	Ø DN2	Ø P2	Ø K2	Ø D2	S2	H	H1	H2	H3	R	A	B	B1	D	E	N1	N2	N3	T	V1	V2		
32-125/1.1	50	95	125	165	16	4	-	32	75	100	140	14	302	112	140	139	80	213	715	272	80	550	300	340	250	710	M25x1.5	M20x1.5	45.1	46.7
32-160/1.5	50	95	125	165	16	4	-	32	75	100	140	14	342	132	160	148	80	254	760	317	80	590	350	390	300	750	M25x1.5	M20x1.5	52.3	52.3
32-160/2.2	50	95	125	165	16	4	-	32	75	100	140	14	342	132	160	148	80	254	760	317	80	590	350	390	300	750	M25x1.5	M20x1.5	53.5	53.5
32-200/3	50	95	125	165	16	4	-	32	75	100	140	14	390	160	180	155	80	296	809	366	80	590	350	390	300	750	M25x1.5	M20x1.5	71.5	71.5
32-200/4	50	95	125	165	16	4	-	32	75	100	140	14	390	160	180	171	80	296	831	388	80	590	350	390	300	750	M25x1.5	M20x1.5	75.1	75.1
32-200/5.5	50	95	125	165	16	4	-	32	75	100	140	14	390	160	180	198	80	296	885	442	100	650	350	390	300	850	M32x1.5	M32x1.5	97	97
32-200/7.5	50	95	125	165	16	4	-	32	75	100	140	14	390	160	180	198	80	296	885	442	100	650	350	390	300	850	M32x1.5	M32x1.5	-	####
40-125/1.5	65	115	145	185	16	4	-	40	80	110	150	14	302	112	140	148	80	213	760	317	80	550	300	340	250	710	M25x1.5	M20x1.5	49.8	49.8
40-125/2.2	65	115	145	185	16	4	-	40	80	110	150	14	302	112	140	148	80	213	760	317	80	550	300	340	250	710	M25x1.5	M20x1.5	51	51
40-160/3	65	115	145	185	16	4	-	40	80	110	150	14	342	132	160	155	80	254	809	366	80	590	350	390	300	750	M25x1.5	M20x1.5	81	81
40-160/4	65	115	145	185	16	4	-	40	80	110	150	14	342	132	160	171	80	254	831	388	80	590	350	390	300	750	M25x1.5	M20x1.5	67.6	67.6
40-200/5.5	65	115	145	185	16	4	-	40	80	110	150	14	390	160	180	198	100	296	905	442	100	650	350	390	300	850	M32x1.5	M32x1.5	98	98
40-200/7.5	65	115	145	185	16	4	-	40	80	110	150	14	390	160	180	198	100	296	905	442	100	650	350	390	300	850	M32x1.5	M32x1.5	-	####
40-200/11	65	115	145	185	16	4	-	40	80	110	150	14	390	160	180	238	100	296	1071	608	100	800	380	420	330	###	M40x1.5	M40x1.5	-	####
50-125/2.2	65	115	145	185	16	4	-	50	95	125	165	16	342	132	160	148	100	254	780	317	80	550	350	390	300	710	M25x1.5	M20x1.5	75	75
50-125/3	65	115	145	185	16	4	-	50	95	125	165	16	342	132	160	155	100	254	829	366	80	590	350	390	300	750	M25x1.5	M20x1.5	82.5	82.5
50-125/4	65	115	145	185	16	4	-	50	95	125	165	16	342	132	160	171	100	254	851	388	80	590	350	390	300	750	M25x1.5	M20x1.5	84.6	84.6
50-160/5.5	65	115	145	185	16	4	-	50	95	125	165	16	390	160	180	198	100	296	905	442	100	650	350	390	300	850	M32x1.5	M32x1.5	98	98
50-160/7.5	65	115	145	185	16	4	-	50	95	125	165	16	390	160	180	198	100	296	905	442	100	650	350	390	300	850	M32x1.5	M32x1.5	-	####
50-200/9.2	65	115	145	185	16	4	-	50	95	125	165	16	410	160	200	198	100	296	945	482	100	650	350	390	300	850	M32x1.5	M32x1.5	-	111
50-200/11	65	115	145	185	16	4	-	50	95	125	165	16	410	160	200	238	100	296	1071	608	100	800	380	420	330	###	M40x1.5	M40x1.5	-	####
50-200/15	65	115	145	185	16	4	-	50	95	125	165	16	410	160	200	238	100	296	1071	608	100	800	380	420	330	###	M40x1.5	M40x1.5	-	####
65-125/4	80	134	160	200	18	8	4	65	115	145	185	16	390	160	180	171	100	254	851	388	80	590	350	390	300	750	M25x1.5	M20x1.5	85.1	85.1
65-125/5.5	80	134	160	200	18	8	4	65	115	145	185	16	390	160	180	198	100	254	905	442	100	650	350	390	300	850	M32x1.5	M32x1.5	99	99
65-125/7.5	80	134	160	200	18	8	4	65	115	145	185	16	390	160	180	198	100	254	905	442	100	650	350	390	300	850	M32x1.5	M32x1.5	-	####
65-160/7.5	80	134	160	200	18	8	4	65	115	145	185	16	410	160	200	198	100	296	905	442	100	650	350	390	300	850	M32x1.5	M32x1.5	-	####
65-160/9.2	80	134	160	200	18	8	4	65	115	145	185	16	410	160	200	198	100	296	945	482	100	650	350	390	300	850	M32x1.5	M32x1.5	-	118
65-160/11	80	134	160	200	18	8	4	65	115	145	185	16	410	160	200	238	100	296	1071	608	100	800	380	420	330	###	M40x1.5	M40x1.5	-	####
65-160/15	80	134	160	200	18	8	4	65	115	145	185	16	410	160	200	238	100	296	1071	608	100	800	380	420	330	###	M40x1.5	M40x1.5	-	129
65-200/15	80	134	160	200	18	8	4	65	115	145	185	16	455	180	225	238	100	296	1071	608	100	800	380	420	330	###	M40x1.5	M40x1.5	-	137
65-200/18.5	80	134	160	200	18	8	4	65	115	145	185	16	455	180	225	238	100	296	1115	652	100	800	380	420	330	###	M40x1.5	M40x1.5	-	####
65-200/22	80	134	160	200	18	8	4	65	115	145	185	16	455	180	225	268	100	296	1150	687	100	800	410	450	360	###	M32x1.5	M32x1.5	-	189

(*) Only for IE3 Motors [1] Standard [2] On request

DIMENSIONS AND WEIGHT

50Hz

Rev. V

PUMP 3LP 65-250, 80-160/200/250

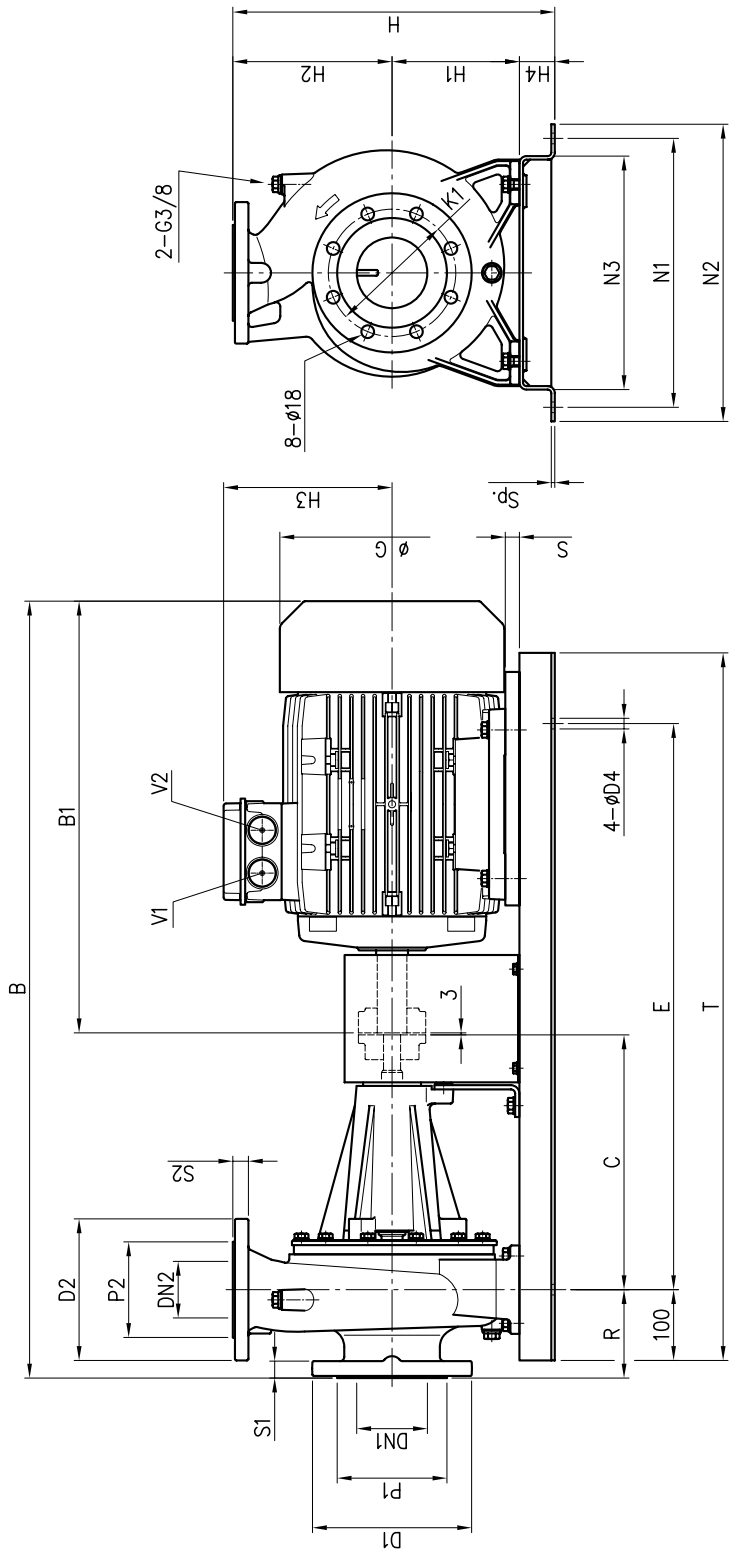

Fig. 1

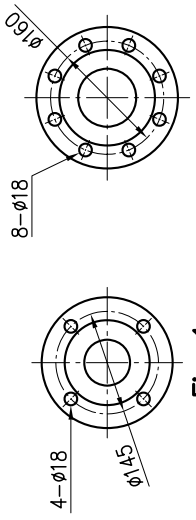

Fig. 2

Pump type	Dimensions [mm]																													Weight [kgf]
	DN1	P1	k1	D1	S1	DN2	P2	D2	S2	H	H1	H2	H3	H4	R	N1	N2	N3	B	B1	C	G	E	T	S	D4	Sp.	V1	V2	
65-250/30	80	135	160	200	22	65 Fig. 1	120	185	20	510	200	250	300	60	100	530	590	460	1341	768	470	399	###	###	-	19	8	M40x1.5	M40x1.5	354
65-250/37	80	135	160	200	22	65 Fig. 1	120	185	20	510	200	250	300	60	100	530	590	460	1341	768	470	399	###	###	-	19	8	M40x1.5	M40x1.5	373
80-160/11	100	155	180	225	24	80 Fig. 2	135	200	22	455	180	225	238	50	125	380	420	330	1096	608	360	317	800	###	20	15	5	M40x1.5	M40x1.5	174.8
80-160/15R	100	155	180	225	24	80 Fig. 2	135	200	22	455	180	225	238	50	125	380	420	330	1096	608	360	317	800	###	20	15	5	M40x1.5	M40x1.5	186
80-160/15	100	155	180	225	24	80 Fig. 2	135	200	22	455	180	225	238	50	125	380	420	330	1096	608	360	317	800	###	20	15	5	M40x1.5	M40x1.5	186
80-160/18.5	100	155	180	225	24	80 Fig. 2	135	200	22	455	180	225	238	50	125	380	420	330	1140	652	360	317	800	###	20	15	5	M40x1.5	M40x1.5	181.2
80-200/22	100	155	180	225	24	80 Fig. 2	135	200	22	490	180	250	268	60	125	530	590	460	1285	687	470	360	###	###	-	19	8	M32x1.5	M32x1.5	259
80-250/37	100	155	180	225	24	80 Fig. 2	135	200	22	540	200	280	300	60	125	530	590	460	1366	768	470	399	###	###	-	19	8	M40x1.5	M40x1.5	377

DIMENSIONS AND WEIGHT

50Hz

Rev. V

PUMP 3LP 80-200/30/37, 80-250/45

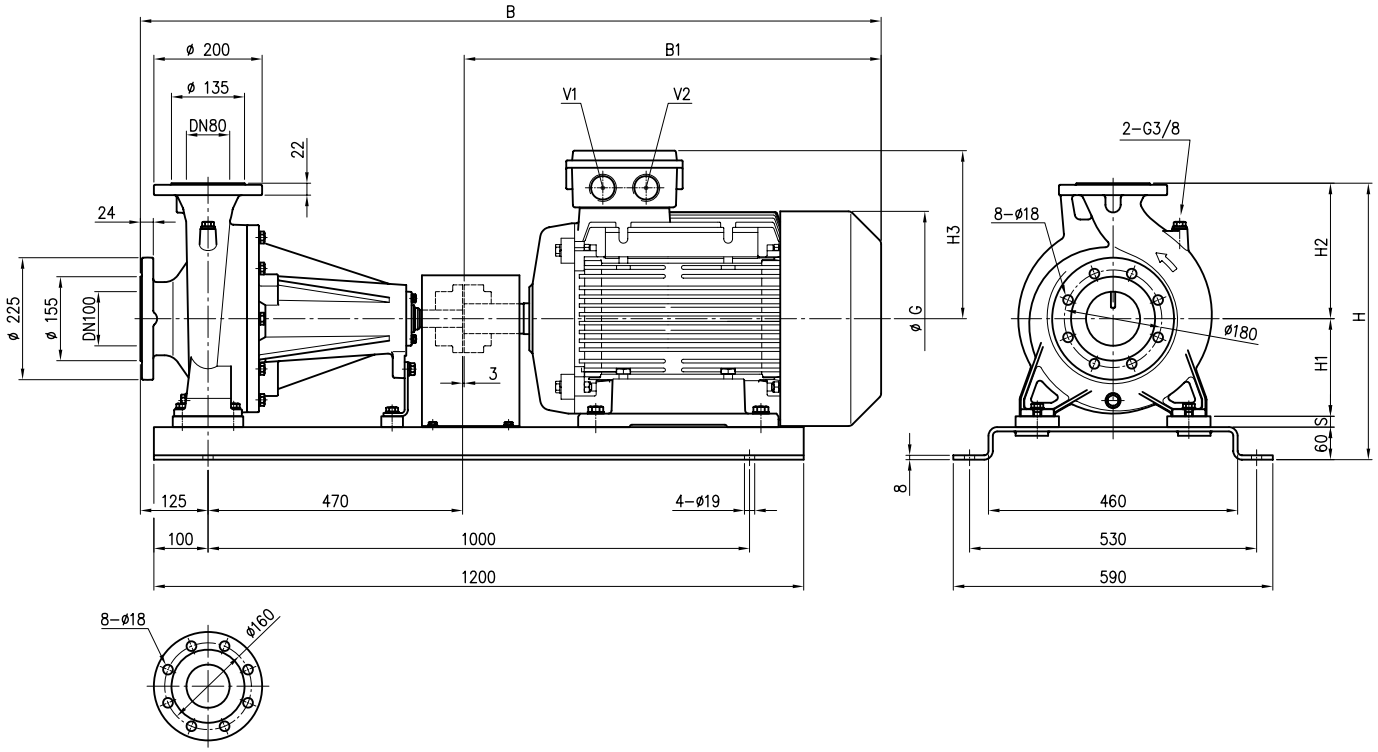

Pump type	Dimensions [mm]										Weight [kgf]
	H	H1	H2	H3	B	B1	G	S	V1	V2	
80-200/30	510	180	250	300	1366	768	399	20	M40x1.5	M40x1.5	356
80-200/37	510	180	250	300	1366	768	399	20	M40x1.5	M40x1.5	365
80-250/45	565	200	280	335	1407	809	465	25	M50x1.5	M50x1.5	440

DIMENSIONS AND WEIGHT

50Hz

Rev. V

PUMP 3LP 80-250/55

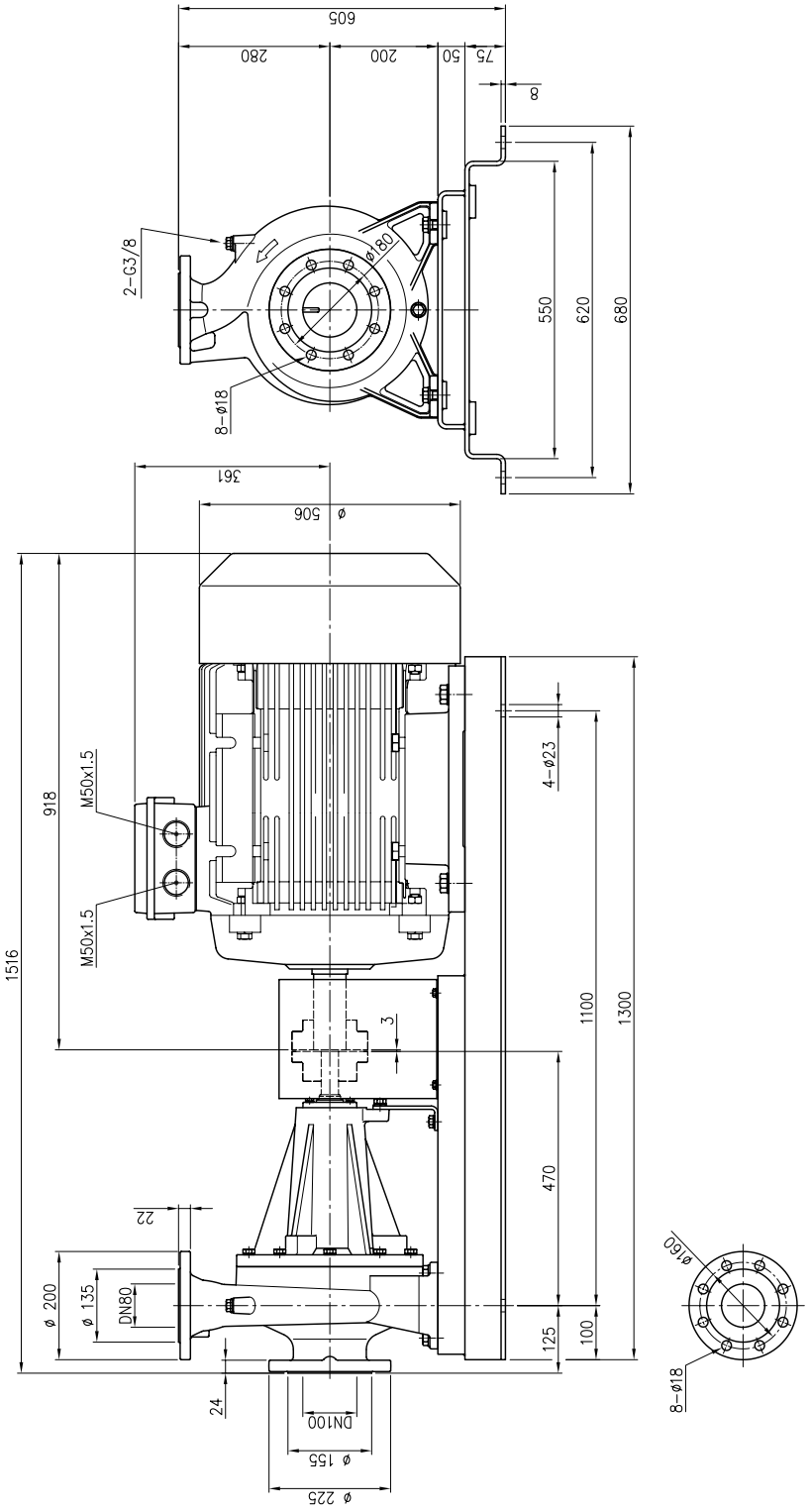

Weigh: 528 kgf

DIMENSIONS AND WEIGHT

50Hz

Rev. V

PACKING 3(.)M

Pump type	Packing [mm]				Weight [kgf]			Pack type
	X	Y	Z	(*)	[1~]	[3~]	(*) [3~]	
32-125/1.1 (M)	250	300	450	450	21,5	29	29	1
32-160/1.5 (M)	280	330	430	470	24,2	31,7	31,7	
32-160/2.2 (M)		340	490	490	27,3	33,5	33,5	
32-200/3	350	488	550	550	-	41	41	2
32-200/4					-	44	44	
32-200/5.5					-	60,5	60,5	
32-200/7.5			-		-	-	65,6	
40-125/1.5 (M)	250	300	450	450	22,3	30	30	1
40-125/2.2 (M)	280	340	490	490	24,7	31,5	31,5	
40-160/3	350	488	550	550	-	28,8	28,8	2
40-160/4					-	46,5	46,5	
40-200/5.5					-	61,5	61,5	
40-200/7.5			-	700	-	-	68,1	
40-200/11					-	-	79,4	
50-125/2.2 (M)	280	340	490	490	30,8	38	38	1
50-125/3	350	488	550	550	-	37	37	2
50-125/4					-	47	47	
50-160/5.5					-	51,5	51,5	
50-160/7.5			-	700	-	-	67,6	
50-200/9.2					-	-	73,5	
50-200/11					-	-	78,9	
50-200/15	390	532	-	880	-	-	113,1	
65-125/4	350	488	550	550	-	41,7	41,7	
65-125/5.5					-	53,2	53,2	
65-125/7.5			-	700	-	-	56,6	
65-160/7.5					-	-	60,6	
65-160/9.2					-	-	66,5	
65-160/11					-	-	72,4	
65-160/15	390	532	-	880	-	-	112,1	
65-200/15					-	-	115,1	
65-200/18.5					-	-	127,3	
65-200/22					-	-	134,1	
80-160/11	370	538	-	680	-	-	105,4	
80-160/15R	370	527	-	860	-	-	136,1	
80-160/15					-	-	137,1	
80-160/18.5					-	-	151,3	

(*) Only for IE3 Motors

TYPE 1

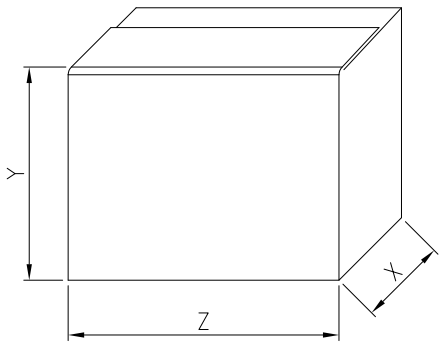

TYPE 2

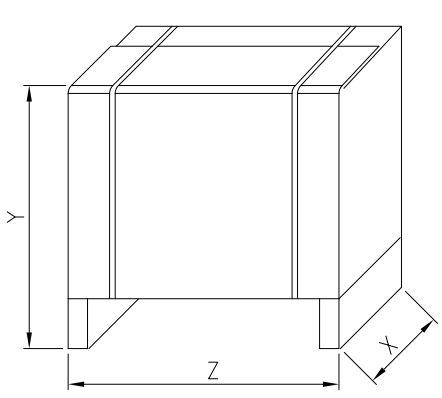

DIMENSIONS AND WEIGHT

50Hz

Rev. V

PACKING 3(.)S

Pump type	Packing [mm]			Weight [kgf]		Pack Type
	X	Y	Z		(*)	
32-125/1.1	450	250	300	34.7	36,3	1
32-160/1.5	350	488	580	35.9	35.9	
32-160/2.2				51	51	
(**) 32-200/3.0	370	538	680	51.9	51.9	
32-200/3.0	350	498	700	51.9	51.9	
32-200/4.0				74.3	74.3	
32-200/5.5				82.1	82.1	
32-200/7.5				-	67	
40-125/1.5	350	488	580	33.3	33.3	
40-125/2.2				45.4	45.4	
40-160/3.0	350	498	700	49	49	
40-160/4.0				76.4	76.4	
40-200/5.5				84.2	84.2	
40-200/7.5				-	116	
40-200/11	390	598	970	-	146.3	
50-125/2.2	330	493	680	37.8	37.8	
50-125/3.0	350	498	700	49.6	49.6	
50-125/4.0				47.6	47.6	
50-160/5.5				84	84	
50-160/7.5				-	95.7	
50-200/9.2	390	598	880	-	116	
50-200/11				-	139.9	
50-200/15				-	172.9	
65-125/4.0	350	498	700	69	69	2
65-125/5.5				77.4	77.4	
65-125/7.5				-	85	
65-160/7.5				-	92	
65-160/9.2	390	598	880	-	103	
65-160/11			970	-	107.9	
65-160/15				-	138	
65-200/15			880	-	147.6	
65-200/18.5			970	-	166.5	
65-200/22	500	727	1100	-	235	
65-250/30	480	722	1080	-	339	
65-250/37				-	141	
80-160/11	370	597	860	-	156.9	
80-160/15R				-	163	
80-160/15				-	168.6	
80-160/18.5		593	940	-	225.5	
80-200/22	480	722	1080	-	284	
80-200/30				-	344	
80-200/37	488			-	354	
80-250/37				-	429	
80-250/45	580	822	1380	-	517	
80-250/55				-	517	

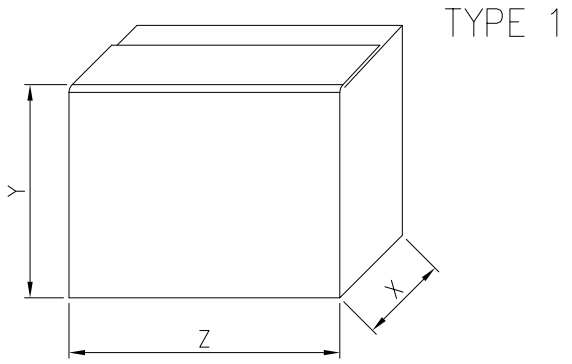

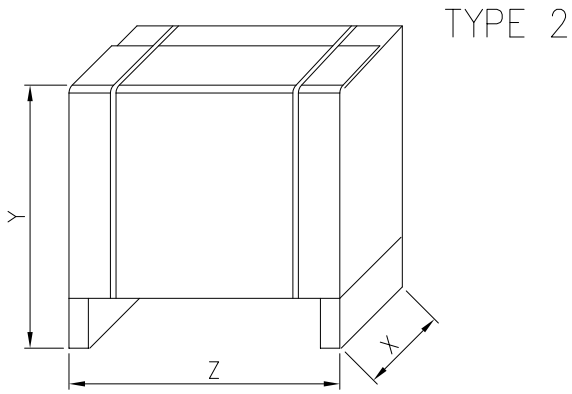

(*) Only for IE3 Motors
(**) Only for "Z" version

DIMENSIONS AND WEIGHT

50Hz

Rev. V

PACKING 3(.)P

Pump type	Packing [mm]			Weight [kgf]	
	Z	X	Y		(*)
32-125/1.1	1200	800	394	45.1	46.7
32-160/1.5			434	52.3	52.3
32-160/2.2				53.5	53.5
32-200/3.0			482	71.5	71.5
32-200/4.0				75.1	75.1
32-200/5.5				97	97
32-200/7.5				-	112.2
40-125/1.5			394	49.8	49.8
40-125/2.2				51	51
40-160/3.0			434	81	81
40-160/4.0				67.6	67.6
40-200/5.5			482	98	98
40-200/7.5				-	106.9
40-200/11				-	127.8
50-125/2.2			434	75	75
50-125/3.0				82.5	82.5
50-125/4.0				84.6	84.6
50-160/5.5			482	98	98
50-160/7.5				-	106.9
50-200/9.2			502	-	111
50-200/11				-	128.3
50-200/15				-	135.4
65-125/4.0			482	85.1	85.1
65-125/5.5				99	99
65-125/7.5				-	109.4
65-160/7.5			502	-	115.4
65-160/9.2				-	118
65-160/11				-	124.8
65-160/15			547	-	129
65-200/15				-	137
65-200/18.5				-	135.2
65-200/22				-	189
65-250/30			685	-	354
65-250/37				-	373
80-160/11			593	-	174.8
80-160/15R				-	186
80-160/15				-	186
80-160/18.5				-	181.2
80-200/22			633	-	259
80-200/30			685	-	356
80-200/37				-	365
80-250/37				-	377
80-250/45			745	-	440
80-250/55			811	-	528

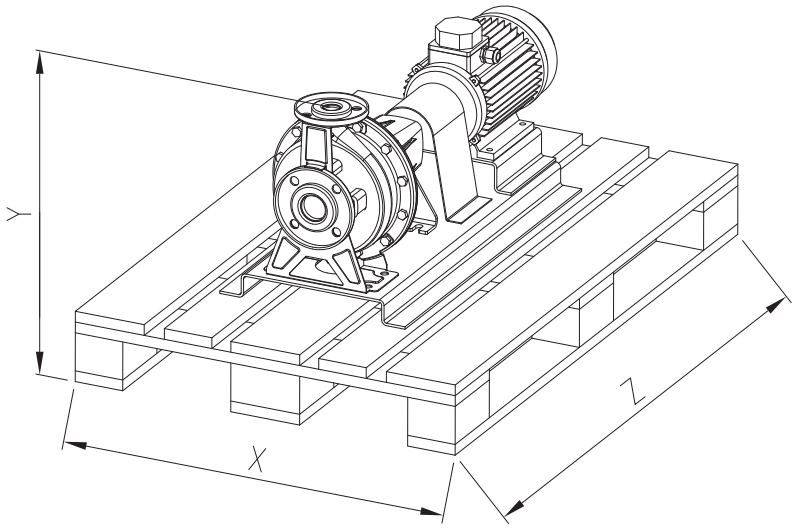

(*) Only for IE3 Motors

TECHNICAL DATA

50Hz

Rev. V

MOTOR DATA 3(.)M

Pump type		Power		Efficiency		Capacitor		Efficiency (% load) Three phase η %			Input [kW]		Full load current [A]				Locked rotor current [A]			
Single Phase	Three Phase	[kW]	[HP]	Single Phase	Three Phase	Single Phase [μF]	[V]	50%	75%	100%	Single Phase	Three Phase	Single Phase 230 V	Three Phase 230 V	Three Phase 400 V	Three Phase 690 V	Single Phase 230 V	Three Phase 230 V	Three Phase 400 V	Three Phase 690 V
3(.)M 32-125/1.1 M	3(.)M(Z) 32-125/1.1	1.1	1.5	-	IE2	31.5	450	79.5	82.0	82.5	1.51	1.82	6.7	5.6	3.2	-	23.5	57.0	33.0	-
-	3(.)M(Z) 32-125/1.1	1.1	1.5	-	IE3	-	-	83.5	84.3	84.6	-	1.77	-	5.8	3.3	-	-	47.4	27.4	-
3(.)M 32-160/1.5 M	3(.)M(Z) 32-160/1.5	1.5	2.0	-	IE2	40	450	79.5	82.0	82.5	2.10	1.82	9.6	5.6	3.2	-	47	57.0	33.0	-
-	3(.)M(Z) 32-160/1.5	1.5	2.0	-	IE3	-	-	83.5	84.3	84.6	-	1.77	-	5.8	3.3	-	-	47.4	27.4	-
3(.)M 32-160/2.2 M	3(.)M(Z) 32-160/2.2	2.2	3.0	-	IE2	50	450	83.1	85.7	86.2	2.95	2.55	13.3	7.8	4.5	-	63.8	75.0	43.5	-
-	3(.)M(Z) 32-160/2.2	2.2	3.0	-	IE3	-	-	86.2	87.0	86.0	-	2.55	-	8.2	4.7	-	-	66.6	38.4	-
-	3(.)M(Z) 32-200/3.0	3.0	4.0	-	IE2	-	-	85.0	86.7	86.3	-	3.48	-	10.6	6.1	-	-	100.0	57.7	-
-	3(.)M(Z) 32-200/3.0	3.0	4.0	-	IE3	-	-	85.9	87.5	87.1	-	3.44	-	11.1	6.4	-	-	90.0	52.0	-
-	3(.)M(Z) 32-200/4.0	4.0	5.5	-	IE2	-	-	84.3	87.2	87.8	-	4.56	-	15.1	8.7	-	-	151.0	87.0	-
-	3(.)M(Z) 32-200/4.0	4.0	5.5	-	IE3	-	-	85.8	88.3	88.4	-	4.52	-	15.1	8.7	-	-	131.8	76.1	-
-	3(.)M(Z) 32-200/5.5	5.5	7.5	-	IE2	-	-	82.9	86.0	87.4	-	6.29	-	-	10.4	6.0	-	-	116.0	67.0
-	3(.)M(Z) 32-200/5.5	5.5	7.5	-	IE3	-	-	89.2	90.6	90.4	-	6.09	-	-	10.6	6.1	-	-	115.3	67.0
-	3(.)M(Z) 32-200/7.5	7.5	10.0	-	IE3	-	-	89.0	90.7	90.8	-	8.26	-	-	13.6	7.9	-	-	144.0	83.0
3(.)M 40-125/1,5 M	3(.)M(Z) 40-125/1.5	1.5	2.0	-	IE2	40	450	79.5	82.0	82.5	2.10	1.82	9.6	5.6	3.2	-	47	57.0	33.0	-
-	3(.)M(Z) 40-125/1.5	1.5	2.0	-	IE3	-	-	83.5	84.3	84.6	-	1.77	-	5.8	3.3	-	-	47.4	27.4	-
3(.)M 40-125/2.2 M	3(.)M(Z) 40-125/2.2	2.2	3.0	-	IE2	50	450	83.1	85.7	86.2	2.95	2.55	13.3	7.8	4.5	-	63.8	75.0	43.5	-
-	3(.)M(Z) 40-125/2.2	2.2	3.0	-	IE3	-	-	86.2	87.0	86.0	-	2.55	-	8.2	4.7	-	-	66.6	38.4	-
-	3(.)M(Z) 40-160/3.0	3.0	4.0	-	IE2	-	-	85.0	86.7	86.3	-	3.48	-	10.6	6.1	-	-	100.0	57.7	-
-	3(.)M(Z) 40-160/3.0	3.0	4.0	-	IE3	-	-	85.9	87.5	87.1	-	3.44	-	11.1	6.4	-	-	90.0	52.0	-
-	3(.)M(Z) 40-160/4.0	4.0	5.5	-	IE2	-	-	84.3	87.2	87.8	-	4.56	-	15.1	8.7	-	-	151.0	87.0	-
-	3(.)M(Z) 40-160/4.0	4.0	5.5	-	IE3	-	-	85.8	88.3	88.4	-	4.52	-	15.1	8.7	-	-	131.8	76.1	-
-	3(.)M(Z) 40-200/5.5	5.5	7.5	-	IE2	-	-	82.9	86.0	87.4	-	6.29	-	-	10.4	6.0	-	-	116.0	67.0
-	3(.)M(Z) 40-200/5.5	5.5	7.5	-	IE3	-	-	89.2	90.6	90.4	-	6.09	-	-	10.6	6.1	-	-	115.3	67.0
-	3(.)M(Z) 40-200/7.5	7.5	10.0	-	IE3	-	-	89.0	90.7	90.8	-	8.26	-	-	13.6	7.9	-	-	144.0	83.0
-	3(.)M(Z) 40-200/11	11.0	15.0	-	IE3	-	-	90.4	91.2	91.8	-	11.98	-	-	21.3	12.3	-	-	184.0	107.0
3(.)M 50-125/2.2 M	3(.)M(Z) 50-125/2.2	2.2	3.0	-	IE2	50	450	83.1	85.7	86.2	2.95	2.55	13.3	7.8	4.5	-	63.8	75.0	43.5	-
-	3(.)M(Z) 50-125/2.2	2.2	3.0	-	IE3	-	-	86.2	87.0	86.0	-	2.55	-	8.2	4.7	-	-	66.6	38.4	-
-	3(.)M(Z) 50-125/3.0	3.0	4.0	-	IE2	-	-	85.0	86.7	86.3	-	3.48	-	10.6	6.1	-	-	100.0	57.7	-
-	3(.)M(Z) 50-125/3.0	3.0	4.0	-	IE3	-	-	85.9	87.5	87.1	-	3.44	-	11.1	6.4	-	-	90.0	52.0	-
-	3(.)M(Z) 50-125/4.0	4.0	5.5	-	IE2	-	-	84.3	87.2	87.8	-	4.56	-	15.1	8.7	-	-	151.0	87.0	-
-	3(.)M(Z) 50-125/4.0	4.0	5.5	-	IE3	-	-	85.8	88.3	88.4	-	4.52	-	15.1	8.7	-	-	131.8	76.1	-
-	3(.)M(Z) 50-160/5.5	5.5	7.5	-	IE2	-	-	82.9	86.0	87.4	-	6.29	-	-	10.4	6.0	-	-	116.0	67.0
-	3(.)M(Z) 50-160/5.5	5.5	7.5	-	IE3	-	-	89.2	90.6	90.4	-	6.09	-	-	10.6	6.1	-	-	115.3	67.0
-	3(.)M(Z) 50-160/7.5	7.5	10.0	-	IE3	-	-	89.0	90.7	90.8	-	8.26	-	-	13.6	7.9	-	-	144.0	83.0
-	3(.)M(Z) 50-200/9.2	9.2	12.5	-	IE3	-	-	90.1	90.8	90.9	-	10.12	-	-	17.2	10.0	-	-	166.0	96.0
-	3(.)M(Z) 50-200/11	11.0	15.0	-	IE3	-	-	90.4	91.2	91.8	-	11.98	-	-	21.3	12.3	-	-	184.0	107.0
-	3(.)M(Z) 50-200/15	15.0	20.0	-	IE3	-	-	91.2	92.0	91.9	-	16.32	-	-	27.7	17.3	-	-	225.0	130.0
-	3(.)M(Z) 65-125/4	4.0	5.5	-	IE2	-	-	84.3	87.2	87.8	-	4.56	-	15.1	8.7	-	-	151.0	87.0	-
-	3(.)M(Z) 65-125/4	4.0	5.5	-	IE3	-	-	85.8	88.3	88.4	-	4.52	-	15.1	8.7	-	-	131.8	76.1	-
-	3(.)M(Z) 65-125/5.5	5.5	7.5	-	IE2	-	-	82.9	86.0	87.4	-	6.29	-	-	10.4	6.0	-	-	116.0	67.0
-	3(.)M(Z) 65-125/5.5	5.5	7.5	-	IE3	-	-	89.2	90.6	90.4	-	6.09	-	-	10.6	6.1	-	-	115.3	67.0
-	3(.)M(Z) 65-125/7.5	7.5	10.0	-	IE3	-	-	89.0	90.7	90.8	-	8.26	-	-	13.6	7.9	-	-	144.0	83.0
-	3(.)M(Z) 65-160/7.5	7.5	10.0	-	IE3	-	-	89.0	90.7	90.8	-	8.26	-	-	13.6	7.9	-	-	144.0	83.0
-	3(.)M(Z) 65-160/9.2	9.2	12.5	-	IE3	-	-	90.1	90.8	90.9	-	10.12	-	-	17.2	10.0	-	-	166.0	96.0
-	3(.)M(Z) 65-160/11	11.0	15.0	-	IE3	-	-	90.4	91.2	91.8	-	11.98	-	-	21.3	12.3	-	-	184.0	107.0
-	3(.)M(Z) 65-160/15	15.0	20.0	-	IE3	-	-	91.2	92.0	91.9	-	16.32	-	-	27.7	17.3	-	-	225.0	130.0
-	3(.)M(Z) 65-200/15	15.0	20.0	-	IE3	-	-	91.2	92.0	91.9	-	16.32	-	-	27.7	17.3	-	-	225.0	130.0
-	3(.)M(Z) 65-200/18.5	18.5	25.0	-	IE3	-	-	91.6	93.0	92.6	-	19.98	-	-	35.0	20.3	-	-	328.0	190.0
-	3(.)M(Z) 65-200/22	22.0	30.0	-	IE3	-	-	92.0	93.1	93.2	-	23.58	-	-	39.7	23.6	-	-	391.0	227.0
-	3LM 80-160/11	11.0	15.0	-	IE3	-	-	90.4	91.2	91.8	-	11.98	-	-	21.3	12.3	-	-	184.0	107.0
-	3LM 80-160/15R	15.0	20.0	-	IE3	-	-	91.2	92.0	91.9	-	16.32	-	-	27.7	17.3	-	-	225.0	130.0
-	3LM 80-160/15	15.0	20.0	-	IE3	-	-	91.2	92.0	91.9	-	16.32	-	-	27.7	17.3	-	-	225.0	130.0
-	3LM 80-160/18.5	18.5	25.0	-	IE3	-	-	91.6	93.0	92.6	-	19.98		-	35.0	20.3	-	-	328.0	190.0

TECHNICAL DATA

50Hz

Rev. V

MOTOR DATA 3(.)S-3(.)P

Pump type		Motor Size	Motor Power [kW]	Motor Power [HP]	Efficiency	Input [kW]	Efficiency (% load) and power-factor η % 50%	η % 75%	η % 100%	cos–ϕ	Full load current [A] 230 V	400 V	690 V	Locked rotor current [A] 230 V	400 V	690 V
3(.)S(Z) 32-125/1.1	3(.)P 32-125/1.1	80	1.1	1.5	IE2	1,35	79.5	81.2	81.5	0.78	4.3	2.5	-	29.4	17.0	-
			1.1	1.5	IE3	1.26	78.7	81.7	82.7	0.76	4.2	2.4	-	38.7	22.3	-
3(.)S(Z) 32-160/1.5	3(.)P 32-160/1.5	90S	1.5	2	IE2	1,77	81,0	82.8	82.8	0.80	5.5	3.2	-	44.9	25.9	-
			1.5	2	IE3	1.77	83.2	84.8	84.2	0.85	5.2	3.0	-	43.6	25.2	-
3(.)S(Z) 32-160/2.2	3(.)P 32-160/2.2	90L	2.2	3	IE2	2,59	82.5	84.0	84.0	0.85	7.6	4.4	-	64.8	37.4	-
			2.2	3	IE3	2.61	85.0	86.2	86.5	0.82	8.0	4.6	-	73.3	42.3	-
3(.)S(Z) 32-200/3.0	3(.)P 32-200/3.0	100L	3	4	IE2	3,43	84.1	85.8	85.5	0.84	10.2	5.9	-	81.8	47.2	-
			3	4	IE3	3.45	82.3	85.8	87.1	0.89	9.7	5.6	-	85.4	49.3	-
3(.)S(Z) 32-200/4.0	3(.)P 32-200/4.0	112M	4	5.5	IE2	4,64	85.2	86.4	86.1	0.86	13.5	7.8	-	110.9	64.0	-
			4	5.5	IE3	4.51	86.8	87.8	88.1	0.93	12.1	7.0	-	116.4	67.2	-
3(.)S(Z) 32-200/5.5	3(.)P 32-200/5.5	132S	5.5	7.5	IE2	6,34	85.8	87.4	87.3	0.88	-	10.4	6.0	-	83.2	48.0
			5.5	7.5	IE3	6.24	88.0	88.5	89.2	0.90	-	10.0	5.8	-	89.0	51.4
3(.)S(Z) 32-200/7.5	3(.)P 32-200/7.5		7.5	10	IE3	8.35	88.6	89.2	90.1	0.92	-	13.1	7.6	-	116.6	67.3
3(.)S(Z) 40-125/1.5	3(.)P 40-125/1.5	90S	1.5	2	IE2	1,77	81.0	82.8	82.8	0.80	5.5	3.2	-	44.9	25.9	-
			1.5	2	IE3	1.77	83.2	84.8	84.2	0.85	5.2	3.0	-	43.6	25.2	-
3(.)S(Z) 40-125/2.2	3(.)P 40-125/2.2	90L	2.2	3	IE2	2,59	82.5	84.0	84.0	0.85	7.6	4.4	-	64.8	37.4	-
			2.2	3	IE3	2.61	85.0	86.2	86.5	0.82	8.0	4.6	-	73.3	42.3	-
3(.)S(Z) 40-160/3.0	3(.)P 40-160/3.0	100L	3	4	IE2	3,43	84.1	85.8	85.5	0.84	10.2	5.9	-	81.8	47.2	-
			3	4	IE3	3.45	82.3	85.8	87.1	0.89	9.7	5.6	-	85.4	49.3	-
3(.)S(Z) 40-160/4.0	3(.)P 40-160/4.0	112M	4	5.5	IE2	4,64	85.2	86.4	86.1	0.86	13.5	7.8	-	110.9	64.0	-
			4	5.5	IE3	4.51	86.8	87.8	88.1	0.93	12.1	7.0	-	116.4	67.2	-
3(.)S(Z) 40-200/5.5	3(.)P 40-200/5.5	132S	5.5	7.5	IE2	6,34	85.8	87.4	87.3	0.88	-	10.4	6.0	-	83.2	48.0
			5.5	7.5	IE3	6.24	88.0	88.5	89.2	0.90	-	10.0	5.8	-	89.0	51.4
3(.)S(Z) 40-200/7.5	3(.)P 40-200/7.5		7.5	10	IE3	8.35	88.6	89.2	90.1	0.92	-	13.1	7.6	-	116.6	67.3
3(.)S(Z) 40-200/11	3(.)P 40-200/11	160M	11	15	IE3	12.15	87.4	89.8	91.2	0.89	-	19.7	11.4	-	179.3	103.5
3(.)S(Z) 50-125/2.2	3(.)P 50-125/2.2	90L	2.2	3	IE2	2,59	82.5	84.0	84.0	0.85	7.6	4.4	-	64.8	37.4	-
			2.2	3	IE3	2.61	85.0	86.2	86.5	0.82	8.0	4.6	-	73.3	42.3	-
3(.)S(Z) 50-125/3.0	3(.)P 50-125/3.0	100L	3	4	IE2	3,43	84.1	85.8	85.5	0.84	10.2	5.9	-	81.8	47.2	-
			3	4	IE3	3.45	82.3	85.8	87.1	0.89	9.7	5.6	-	85.4	49.3	-
3(.)S(Z) 50-125/4.0	3(.)P 50-125/4.0	112M	4	5.5	IE2	4,64	85.2	86.4	86.1	0.86	13.5	7.8	-	110.9	64.0	-
			4	5.5	IE3	4.51	86.8	87.8	88.1	0.93	12.1	7.0	-	116.4	67.2	-
3(.)S(Z) 50-160/5.5	3(.)P 50-160/5.5	132S	5.5	7.5	IE2	6,34	85.8	87.4	87.3	0.88	-	10.4	6.0	-	83.2	48.0
			5.5	7.5	IE3	6.24	88.0	88.5	89.2	0.90	-	10.0	5.8	-	89.0	51.4
3(.)S(Z) 50-160/7.5	3(.)P 50-160/7.5		7.5	10	IE3	8.35	88.6	89.2	90.1	0.92	-	13.1	7.6	-	116.6	67.3
3(.)S(Z) 50-200/9.2	3(.)P 50-200/9.2	132M	9.2	12.5	IE3	10.17	88.6	89.8	90.7	0.89	-	16.5	9.5	-	166.7	96.2
3(.)S(Z) 50-200/11	3(.)P 50-200/11	160M	11	15	IE3	12.15	87.4	89.8	91.2	0.89	-	19.7	11.4	-	179.3	103.5
3(.)S(Z) 50-200/15	3(.)P 50-200/15		15	20	IE3	16.46	91.0	91.3	91.9	0.89	-	26.7	15.4	-	259.0	149.5
3(.)S(Z) 65-125/4	3(.)P 65-125/4	112M	4	5.5	IE2	4,64	85.2	86.4	86.1	0.86	13.5	7.8	-	110.9	64.0	-
			4	5.5	IE3	4.51	86.8	87.8	88.1	0.93	12.1	7.0	-	116.4	67.2	-
3(.)S(Z) 65-125/5.5	3(.)P 65-125/5.5	132S	5.5	7.5	IE2	6,34	85.8	87.4	87.3	0.88	-	10.4	6.0	-	83.2	48.0
			5.5	7.5	IE3	6.24	88.0	88.5	89.2	0.90	-	10.0	5.8	-	89.0	51.4
3(.)S(Z) 65-125/7.5	3(.)P 65-125/7.5		7.5	10	IE3	8.35	88.6	89.2	90.1	0.92	-	13.1	7.6	-	116.6	67.3
3(.)S(Z) 65-160/7.5	3(.)P 65-160/7.5		7.5	10	IE3	8.35	88.6	89.2	90.1	0.92	-	13.1	7.6	-	116.6	67.3
3(.)S(Z) 65-160/9.2	3(.)P 65-160/9.2	132M	9.2	12.5	IE3	10.17	88.6	89.8	90.7	0.89	-	16.5	9.5	-	166.7	96.2
3(.)S(Z) 65-160/11	3(.)P 65-160/11	160M	11	15	IE3	12.15	87.4	89.8	91.2	0.89	-	19.7	11.4	-	179.3	103.5
3(.)S(Z) 65-160/15	3(.)P 65-160/15		15	20	IE3	16.46	91.0	91.3	91.9	0.89	-	26.7	15.4	-	259.0	149.5
3(.)S(Z) 65-200/15	3(.)P 65-200/15		15	20	IE3	16.46	91.0	91.3	91.9	0.89	-	26.7	15.4	-	259.0	149.5
3(.)S(Z) 65-200/18.5	3(.)P 65-200/18.5	160L	18.5	25	IE3	20.12	91.6	92.8	92.4	0.88	-	33.0	19.1	-	353.1	203.9
3(.)S(Z) 65-200/22	3(.)P 65-200/22	180	22	30	IE3	23.69	92.3	92.9	92.9	0.90	-	38.0	22.0	-	361.0	209.0
3LS 65-250/30	3LP 65-250/30	200	30	40	IE3	31.94	92.8	93.9	94.0	0.89	-	51.8	30.0	-	459.0	270.0
3LS 65-250/37	3LP 65-250/37		37	50	IE3	38.97	93.0	93.9	93.8	0.90	-	62.5	36.0	-	496.0	288.0
3LS 80-160/11	3LP 80-160/11	160M	11	15	IE3	12.15	87.4	89.8	91.2	0.89	-	19.7	11.4	-	179.3	103.5
3LS 80-160/15R	3LP 80-160/15R		15	20	IE3	16.46	91.0	91.3	91.9	0.89	-	26.7	15.4	-	259.0	149.5
3LS 80-160/15	3LP 80-160/15		15	20	IE3	16.46	91.0	91.3	91.9	0.89	-	26.7	15.4	-	259.0	149.5
3LS 80-160/18.5	3LP 80-160/18.5	160L	18.5	25	IE3	20.12	91.6	92.8	92.4	0.88	-	33.0	19.1	-	353.1	203.9
3LS 80-200/22	3LP 80-200/22	180	22	30	IE3	23.69	92.3	92.9	92.9	0.90	-	38.0	22.0	-	361.0	209.0
3LS 80-200/30	3LP 80-200/30	200	30	40	IE3	31.94	92.8	93.9	94.0	0.89	-	51.8	30.0	-	459.0	270.0
3LS 80-200/37	3LP 80-200/37		37	50	IE3	38.97	93.0	93.9	93.8	0.90	-	62.5	36.0	-	496.0	288.0
3LS 80-250/37	3LP 80-250/37		37	50	IE3	38.97	93.0	93.9	93.8	0.90	-	62.5	36.0	-	496.0	288.0
3LS 80-250/45	3LP 80-250/45	225	45	60	IE3	47.49	93.2	94.6	94.8	0.92	-	74.5	43.0	-	633.0	366.0
3LS 80-250/55	3LP 80-250/55	250	55	75	IE3	58.30	93.6	94.5	94.4	0.90	-	93.5	54.0	-	935.0	540.0

NOISE DATA 3(.)M

Pump type		Power		L_{pA} - dB(A) *
Single Phase	Three Phase	[kW]	[HP]	
3(.)M 32-125/1.1 M	3(.)M(Z) 32-125/1.1	1.1	1.5	<70
3(.)M 32-160/1.5 M	3(.)M(Z) 32-160/1.5	1.5	2.0	
3(.)M 32-160/2.2 M	3(.)M(Z) 32-160/2.2	2.2	3.0	
-	3(.)M(Z) 32-200/3.0	3.0	4.0	71
-	3(.)M(Z) 32-200/4.0	4.0	5.5	
-	3(.)M(Z) 32-200/5.5	5.5	7.5	75
-	3(.)M(Z) 32-200/7.5	7.5	10.0	
3(.)M 40-125/1,5 M	3(.)M(Z) 40-125/1.5	1.5	2.0	<70
3(.)M 40-125/2.2 M	3(.)M(Z) 40-125/2.2	2.2	3.0	
-	3(.)M(Z) 40-160/3.0	3.0	4.0	71
-	3(.)M(Z) 40-160/4.0	4.0	5.5	
-	3(.)M(Z) 40-200/5.5	5.5	7.5	75
-	3(.)M(Z) 40-200/7.5	7.5	10.0	
-	3(.)M(Z) 40-200/11	11.0	15.0	80
3(.)M 50-125/2.2 M	3(.)M(Z) 50-125/2.2	2.2	3.0	<70
-	3(.)M(Z) 50-125/3.0	3.0	4.0	71
-	3(.)M(Z) 50-125/4.0	4.0	5.5	
-	3(.)M(Z) 50-160/5.5	5.5	7.5	75
-	3(.)M(Z) 50-160/7.5	7.5	10.0	
-	3(.)M(Z) 50-200/9.2	9.2	12.5	80
-	3(.)M(Z) 50-200/11	11.0	15.0	
-	3(.)M(Z) 50-200/15	15.0	20.0	
-	3(.)M(Z) 65-125/4	4.0	5.5	71
-	3(.)M(Z) 65-125/5.5	5.5	7.5	75
-	3(.)M(Z) 65-125/7.5	7.5	10.0	
-	3(.)M(Z) 65-160/7.5	7.5	10.0	
-	3(.)M(Z) 65-160/9.2	9.2	12.5	80
-	3(.)M(Z) 65-160/11	11.0	15.0	
-	3(.)M(Z) 65-160/15	15.0	20.0	
-	3(.)M(Z) 65-200/15	15.0	20.0	
-	3(.)M(Z) 65-200/18.5	18.5	25.0	83-82
-	3(.)M(Z) 65-200/22	22.0	30.0	
-	3LM 80-160/11	11.0	15.0	80
	3LM 80-160/15R	15.0	20.0	
-	3LM 80-160/15	15.0	20.0	
-	3LM 80-160/18.5	18.5	25.0	83-82

* Mean value of several measures at 1m distance around the pump.
Tolerance ± 2.5 dB.

NOISE DATA 3(.)S-3(.)P

Pump type		Motor Size	Power [kW]	Power [HP]	L_{pA} - dB(A) *
3(.)S(Z) 32-125/1.1	3(.)P 32-125/1.1	80	1.1	1.5	<70
3(.)S(Z) 32-160/1.5	3(.)P 32-160/1.5	90S	1.5	2	
3(.)S(Z) 32-160/2.2	3(.)P 32-160/2.2	90L	2.2	3	
3(.)S(Z) 32-200/3.0	3(.)P 32-200/3.0	100L	3	4	
3(.)S(Z) 32-200/4.0	3(.)P 32-200/4.0	112M	4	5.5	<70
3(.)S(Z) 32-200/5.5	3(.)P 32-200/5.5	132S	5.5	7.5	72
3(.)S(Z) 32-200/7.5	3(.)P 32-200/7.5	132S	7.5	10	
3(.)S(Z) 40-125/1.5	3(.)P 40-125/1.5	90S	1.5	2	<70
3(.)S(Z) 40-125/2.2	3(.)P 40-125/2.2	90L	2.2	3	
3(.)S(Z) 40-160/3.0	3(.)P 40-160/3.0	100L	3	4	
3(.)S(Z) 40-160/4.0	3(.)P 40-160/4.0	112M	4	5.5	<70
3(.)S(Z) 40-200/5.5	3(.)P 40-200/5.5	132S	5.5	7.5	72
3(.)S(Z) 40-200/7.5	3(.)P 40-200/7.5	132S	7.5	10	
3(.)S(Z) 40-200/11	3(.)P 40-200/11	160M	11	15	74
3(.)S(Z) 50-125/2.2	3(.)P 50-125/2.2	90L	2.2	3	<70
3(.)S(Z) 50-125/3.0	3(.)P 50-125/3.0	100L	3	4	
3(.)S(Z) 50-125/4.0	3(.)P 50-125/4.0	112M	4	5.5	<70
3(.)S(Z) 50-160/5.5	3(.)P 50-160/5.5	132S	5.5	7.5	72
3(.)S(Z) 50-160/7.5	3(.)P 50-160/7.5	132S	7.5	10	
3(.)S(Z) 50-200/9.2	3(.)P 50-200/9.2	132M	9.2	12.5	
3(.)S(Z) 50-200/11	3(.)P 50-200/11	160M	11	15	74
3(.)S(Z) 50-200/15	3(.)P 50-200/15	160M	15	20	
3(.)S(Z) 65-125/4	3(.)P 65-125/4	112M	4	5.5	<70
3(.)S(Z) 65-125/5.5	3(.)P 65-125/5.5	132S	5.5	7.5	72
3(.)S(Z) 65-125/7.5	3(.)P 65-125/7.5	132S	7.5	10	
3(.)S(Z) 65-160/7.5	3(.)P 65-160/7.5	132S			
3(.)S(Z) 65-160/9.2	3(.)P 65-160/9.2	132M	9.2	12.5	
3(.)S(Z) 65-160/11	3(.)P 65-160/11	160M	11	15	74
3(.)S(Z) 65-160/15	3(.)P 65-160/15	160M	15	20	
3(.)S(Z) 65-200/15	3(.)P 65-200/15	160M			
3(.)S(Z) 65-200/18.5	3(.)P 65-200/18.5	160L	18.5	25	
3(.)S(Z) 65-200/22	3(.)P 65-200/22	180	22	30	77
3LS 65-250/30	3LP 65-250/30	200	30	40	78
3LS 65-250/37	3LP 65-250/37	200	37	50	
3LS 80-160/11	3LP 80-160/11	160M	11	15	74
3LS 80-160/15R	3LP 80-160/15R	160M	15	20	
3LS 80-160/15	3LP 80-160/15	160M	15	20	
3LS 80-160/18.5	3LP 80-160/18.5	160L	18.5	25	
3LS 80-200/22	3LP 80-200/22	180	22	30	77
3LS 80-200/30	3LP 80-200/30	200	30	40	78
3LS 80-200/37	3LP 80-200/37	200	37	50	
3LS 80-250/37	3LP 80-250/37	200	37	50	
3LS 80-250/45	3LP 80-250/45	225	45	60	80
3LS 80-250/55	3LP 80-250/55	250	55	75	81

* Mean value of several measures at 1m distance around the pump.
Tolerance ± 2.5 dB.
Sound pressure level of motor pumps with AEG